CONSTRUCTION DOCUMENTS

Project:
LOGAN COUNTY COMMUNITY CENTER
1120 PAWNEE AVENUE
STERLING, CO 80751

Owner:
LOGAN COUNTY
315 MAIN STREET
STERLING, CO 80751

Architects:
CAIRN DESIGN, LLC
1805 Sheely Drive
Fort Collins, Colorado 80526

Civil Engineer:
I2 CONSULTANTS, INC.
16911 Potts Place
Mead, CO 80504

Structural Engineer:
JVA CONSULTING ENGINEERS
213 Linden Street, Suite 200
Fort Collins, Colorado 80524

Mechanical and Plumbing Engineer:
BOWMAN
323 3rd Avenue, Suite 100
Longmont, Colorado 80501

Kitchen Hood Engineer:
FRY ENGINEERING
2702 Bianco Dr.
Fort Collins, CO 80521

Electrical Engineer:
CAIRN DESIGN, LLC
1805 Sheely Drive
Fort Collins, Colorado 80526

DRAWING INDEX

GENERAL
A-01 COVER SHEET

CIVIL
C-1 COVER SHEET
C-2 EXISTING CONDITIONS / DEMOLITION PLAN
C-3 HORIZONTAL CONTROL / UTILITY PLAN
C-4 GRADING AND EROSION CONTROL PLAN
C-5 CIVIL DETAILS
C-6 CIVIL DETAILS

STRUCTURAL
S-000 GENERAL NOTES
S-001 SPECIAL INSPECTIONS AND ANNOTATIONS
S-101 FOUNDATION PLAN
S-500 SCHEDULES AND DETAILS
S-501 DETAILS, SECTIONS AND SCHEDULES

ARCHITECTURAL
A-02 GENERAL PROJECT NOTES, DEMO NOTES AND ABBREVIATIONS
A-03 ARCHITECTURAL SPECIFICATIONS
A-04 ARCHITECTURAL SPECIFICATIONS
A-05 PEMB SPECIFICATIONS
A-06 OVERALL BUILDING PLAN
A-10 FLOOR PLAN
A-11 CEILING PLAN
A-12 DEMOLITION PLAN
A-13 ENLARGED PLANS
A-14 ARCHITECTURAL SITE LAYOUT
A-31 BUILDING ELEVATIONS
A-32 BUILDING ELEVATIONS
A-40 PEMB PLAN
A-41 PEMB ROOF PLAN
A-42 PEMB ELEVATIONS
A-43 PEMB SECTIONS
A-50 INTERIOR ELEVATIONS AND DETAILS
A-51 PARTITION TYPES AND DETAILS
A-61 DOOR AND FRAME SCHEDULE, DOOR, WINDOW AND FRAME DETAILS
A-62 FINISH SCHEDULE
A-70 COMCHECK COMPLIANCE REPORT

PLUMBING
P01 PLUMBING LEGEND AND NOTES
P02 PLUMBING DRAIN, WASTE AND VENT PLAN
P03 PLUMBING SCHEDULES
P04 PLUMBING DETAILS
P05 PLUMBING ISOMETRICS
P10 PLUMBING DRAIN, WASTE AND VENT PLAN
P11 PLUMBING DOMESTIC WATER AND GAS PLAN

MECHANICAL
M01 MECHANICAL LEGEND AND NOTES
M02 MECHANICAL CONTROLS AND NOTES
M03 MECHANICAL SCHEDULES
M04 MECHANICAL DETAILS
M10 FIRST FLOOR PLAN - MECHANICAL

KITCHEN HVAC/PLUMB
M-01 MECHANICAL GENERAL SPECIFICATIONS AND LEGEND
M-1 HVAC PLAN
M-2 HVAC ROOF PLAN
M-3 HVAC SCHEDULE AND DETAILS
M-4 HOOD SCHEDULES
M-5 HOOD DETAILS
M-6 HOOD FAN SCHEDULES
M-7 HOOD FAN DETAILS
M-8 HOOD CONTROL AND EXHAUST DUCT DETAILS
M-9 HOOD FAN CONTROL DETAILS
P-0.1 PLUMBING GENERAL SPECIFICATIONS AND LEGEND
P-1 PLUMBING PLAN
P-2 PLUMBING DWV PLAN
P-2.1 PLUMBING ROOF PLAN
P-3 PLUMBING SCHEDULES AND DETAILS

ELECTRICAL
E-00 ELECTRICAL, SYMBOLS, AND SPECIFICATIONS
E-11 ELECTRICAL SITE PLAN
E-21 ELECTRICAL LIGHTING PLAN
E-22 ELECTRICAL POWER PLAN
E-23 ELECTRICAL SOUND SYSTEM PLAN
E-30 ELECTRICAL SCHEDULES
E-40 ELECTRICAL COMCHECK

FIRE PROTECTION
FP-01 FIRE PROTECTION PLAN
FP-02 FIRE PROTECTION SPECIFICATIONS

BUILDING CODE SUMMARY

CODE_2208

GENERAL
Building Area Included in Scope of Work:
- 8,000 Sq. Ft. in Assembly Occupancy

Assembly Occupancy is Sprinklered.

APPLICABLE CODES FOR REFERENCE. CONTRACTOR MUST VERIFY THE LATEST EDITION OF EACH CODE ADOPTED BY LOCAL GOVERNING AUTHORITIES.
- 2006 International Building Code
- 2006 International Mechanical Code
- 2006 International Plumbing Code
- 2006 International Fuel Gas Code
- 2006 International Energy Conservation Code
- 2017 National Electrical Code
- International Fire Code as adopted by Weld County
- Local Ordinances
- Americans with Disabilities Act
- ANSI A117.1 Accessible and Usable Buildings and Facilities

CHAPTER 3 - USE and OCCUPANCY CLASSIFICATION
USE AND OCCUPANCY CLASSIFICATION 303
Occupancy and Use is Assembly (A-3)

CHAPTER 5 - GENERAL HEIGHTS AND BUILDING AREAS
ALLOWABLE BUILDING HEIGHT TABLE 503
Maximum building height - 75 feet.

ALLOWABLE NUMBER OF STORIES ABOVE GRADE PLANE: TABLE 503
Allowable number of stories above grade - 3.

ALLOWABLE AREA TABLE 503
Allowable area is 9,500 sqft per floor.

REQUIRED SEPARATION OF OCCUPANCIES:
N/A

CHAPTER 6 - TYPE OF CONSTRUCTION
TYPE OF CONSTRUCTION: SECTION 601 = TYPE IIB

FIRE-RESISTANCE RATING FOR BUILDING ELEMENTS: TABLE 601
Interior partitions and walls: no rating required.

FIRE-RESISTANCE RATINGS FOR EXTERIOR WALLS: TABLE 602
Where Fire Separation Distance Exceeds 30', exterior walls need no rating per Table 602.
Where Fire Separation Distance Is Less Than 30', exterior walls need a 1 hour rating per Table 602.

CHAPTER 7 - FIRE RATED CONSTRUCTION
Existing Arena Building is sprinklered.
Maximum Area of Exterior Wall Openings: per Table 705.8, with fire separation distance >30', UNLIMITED

CHAPTER 9 - FIRE PROTECTION SYSTEMS
The building is sprinklered.

CHAPTER 10 - MEANS OF EGRESS
OCCUPANT LOAD:
Assembly Use square footage:
6,095 net square feet/5 net square feet = 1,219 Occupants
Remainder of Assembly Occupancy (storage, toilets, etc.) is accessory to the Assembly Use and are occupied by the same persons.

Total building occupants 1,219 Occupants

Egress width per section 1005
1219 occupants/0.15" per occupant = 183"
Total exit width provided = 194"

MAXIMUM COMMON PATH OF EGRESS TRAVEL DISTANCE: TABLE 1014.3
Occupancy Group A = maximum 75' for spaces with occupant load > 30, with a sprinkler system.
Maximum distance is not exceeded in the provided plans within the scope of work.

EXIT ACCESS TRAVEL DISTANCE: TABLE 1014
Occupancy Group A = maximum 250' with a sprinkler system.
Maximum distance is not exceeded in the provided plans within the scope of work.

CHAPTER 29 PLUMBING SYSTEMS
Occupant load - 1,219 occupants.
Male - 609 occupants.
Female - 610 occupants.
Male WC - 609 occupants / 125 = 5.
Female WC - 610 occupants / 65 = 5.
Total Male = 2 WC and 4 urinals are provided.
Total Female = 5 WC are provided.
Lavatories - 1,219 occupants / 200 = 6.
8 lavatories are provided.
Drinking fountains 1 per 500. 3 provided.
Service Sink 1 required. 1 provided.

AERIAL VIEW
NO SCALE

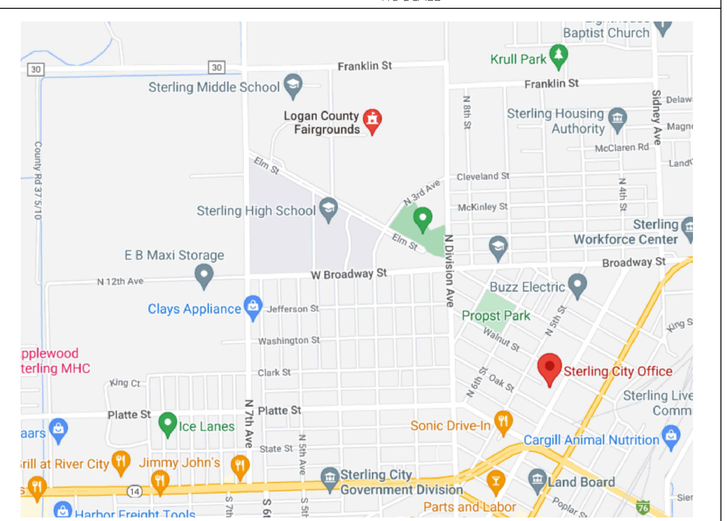

01 LOCATION PLAN
NO SCALE

CAIRN DESIGN LLC
leading high performance building solutions

1805 Sheely Drive
Fort Collins, CO 80526

voice: (970)-286-7968

cairndesignllc.com

STATE OF COLORADO
KATHERINE W. LIGON
404152
LICENSED ARCHITECT

PROJECT:
LOGAN COUNTY COMMUNITY CENTER ADDITION

SHEET TITLE:
COVER SHEET
BUILDING CODE SUMMARY

ISSUE DATE:
BID/PERMIT
12/16/2022

REVISIONS:

PROJECT NO.:
2208

SHEET NO.
A-01

As instruments of service, these drawings and the design represented are the permanent property of Cairn Design, LLC. Reproduction or use of these drawings other than for the project intended, without written consent from the Designer, is prohibited. Unauthorized use will be subject to legal action.

LOGAN COUNTY COMMUNITY CENTER
STERLING, CO
CONSTRUCTION PLANS

± 0.3 ACRES

DECEMBER 2022

LOCATED IN THE NORTHWEST QUARTER OF SECTION 29, TOWNSHIP 8 NORTH, RANGE 52 WEST OF THE 6TH PRINCIPAL MERIDIAN, CITY OF STERLING, COUNTY OF LOGAN, STATE OF COLORADO

CALL 2-BUSINESS DAYS IN ADVANCE BEFORE YOU DIG, GRADE, OR EXCAVATE FOR MARKING OF UNDERGROUND MEMBER UTILITIES.

CAIRN DESIGN LLC
leading high performance building solutions

1805 Sheely Drive
Fort Collins, CO 80526

voice: (970)-286-7968

cairndesignllc.com

GENERAL NOTES:

1. ALL WORK WITHIN THE PUBLIC RIGHT-OF-WAY, OR EASEMENTS SHALL CONFORM TO THE CITY OF STERLING CONSTRUCTION SPECIFICATIONS AND DESIGN STANDARDS.
2. THE CONTRACTOR IS RESPONSIBLE FOR OBTAINING ALL REQUIRED PERMITS PRIOR TO COMMENCEMENT OF ANY WORK ON THE PROJECT. A PERMIT FROM PUBLIC WORKS DEPARTMENT IS REQUIRED FOR ALL CONSTRUCTION IN PUBLIC RIGHT-OF-WAY OR EASEMENTS. CALL UTILITY NOTIFICATION CENTER OF COLORADO AT 1-800-922-1987 FOR UTILITY LOCATES AT LEAST 48 HOURS PRIOR TO ANY EXCAVATION WORK.
3. IT IS THE CONTRACTOR'S RESPONSIBILITY TO NOTIFY THE OWNER/ DEVELOPER, AND THE COUNTY, OF ANY PROBLEMS IN CONFORMING TO THE ACCEPTED PLANS FOR ANY ELEMENT OF THE PROPOSED IMPROVEMENTS PRIOR TO ITS CONSTRUCTION.
5. IT IS THE RESPONSIBILITY OF THE CONTRACTOR DURING CONSTRUCTION ACTIVITIES TO RESOLVE CONSTRUCTION PROBLEMS DUE TO CHANGED CONDITIONS, OR DESIGN ERRORS ENCOUNTERED BY THE CONTRACTOR DURING THE PROGRESS OF ANY PORTION OF THE PROJECT. IF, IN THE OPINION OF THE COUNTY, THE MODIFICATIONS PROPOSED BY THE CONTRACTOR, TO THE ACCEPTED PLANS, INVOLVE SIGNIFICANT CHANGES TO THE CHARACTER OF THE WORK, OR TO THE FUTURE CONTIGUOUS PUBLIC OR PRIVATE IMPROVEMENTS, THE CONTRACTOR SHALL BE RESPONSIBLE FOR RE-SUBMITTING THE REVISED PLANS TO LOGAN COUNTY FOR ACCEPTANCE PRIOR TO ANY FURTHER CONSTRUCTION RELATED TO THAT PORTION OF THE PROJECT. ANY IMPROVEMENTS NOT CONSTRUCTED IN ACCORDANCE WITH THE ACCEPTED PLANS, OR THE ACCEPTED REVISED PLANS, SHALL BE REMOVED AND RECONSTRUCTED ACCORDING TO THE APPROVED PLAN.
6. THE CONTRACTOR SHALL BE SOLELY AND COMPLETELY RESPONSIBLE FOR THE CONDITIONS AT AND ADJACENT TO THE JOB SITE, INCLUDING SAFETY OF ALL PERSONS AND PROPERTY, DURING THE PERFORMANCE OF THE WORK. THIS REQUIREMENT SHALL APPLY CONTINUOUSLY AND SHALL NOT BE LIMITED TO NORMAL WORKING HOURS. THE DUTY OF THE COUNTY TO CONDUCT CONSTRUCTION REVIEW OF THE CONTRACTOR'S PERFORMANCE IS NOT INTENDED TO INCLUDE REVIEW OF THE ADEQUACY OF THE CONTRACTOR'S SAFETY MEASURES IN, ON, OR NEAR THE CONSTRUCTION SITE.
7. THE CONTRACTOR SHALL PROVIDE ALL LIGHTS, SIGNS, BARRICADES, FLAG PERSONS, OR OTHER DEVICES NECESSARY TO PROVIDE FOR PUBLIC SAFETY IN ACCORDANCE WITH THE CURRENT MANUAL ON UNIFORM TRAFFIC CONTROL DEVICES, AND ANY NECESSARY SUPPLEMENTS TO THE MANUAL ON UNIFORM TRAFFIC CONTROL DEVICES.
8. THE CONTRACTOR IS RESPONSIBLE FOR THE PROTECTION OF ALL SURVEY MONUMENTS. ANY MONUMENT THAT MUST BE DESTROYED FOR CONSTRUCTION SHALL BE REPLACED. THE CONTRACTOR SHALL ENGAGE THE SERVICES OF A PROFESSIONAL LICENSED SURVEYOR (PLS) PRIOR TO DISTURBING ANY MONUMENTS.
9. PRIOR TO FINAL PLACEMENT OF SURFACE PAVEMENT, ALL UNDERGROUND UTILITY MAINS SHALL BE INSTALLED AND SERVICE CONNECTIONS STUBBED OUT BEYOND CURB LINE, WHEN ALLOWED BY THE UTILITY. SERVICE FROM PUBLIC UTILITIES AND FROM SANITARY SEWERS SHALL BE MADE AVAILABLE FOR EACH LOT IN SUCH A MANNER THAT WILL NOT BE NECESSARY TO DISTURB THE STREET PAVEMENT, CURB, GUTTER, AND SIDEWALK WHEN CONNECTIONS ARE MADE.
10. A GEOTECHNICAL REPORT HAS BEEN PREPARED FOR THE PROJECT - REFER TO THE GEOTECHNICAL REPORT FOR ANY REQUIREMENTS REGARDING PAVING.
11. THE CONTRACTOR SHALL RESTRICT WORKING HOURS TO BETWEEN 7:00AM AND 6:00PM ON NORMAL CITY OF STERLING BUSINESS DAYS UNLESS PRIOR APPROVAL HAS BEEN OBTAINED FROM THE CITY.

WATER, SANITARY SEWER AND NON-POTABLE IRRIGATION GENERAL NOTES:

1. ALL CONSTRUCTION WORK TO BE ACCEPTED BY THE CITY SHALL CONFORM TO THE CITY OF STERLING CONSTRUCTION SPECIFICATIONS AND DESIGN STANDARDS.
2. ALL OVER LOT GRADING IN THE RIGHT-OF-WAY OR EASEMENT SHALL BE COMPLETED PRIOR TO INSTALLING POTABLE WATER, SANITARY SEWER, OR NON-POTABLE IRRIGATION LINES.
3. CONTRACTOR SHALL VERIFY ALL UTILITY LOCATIONS PRIOR TO CONSTRUCTION. CALL UTILITY NOTIFICATION CENTER OF COLORADO AT 1-800-922-1987 OR DIAL 811 FOR UTILITY LOCATES 48 HOURS PRIOR TO ANY EXCAVATION WORK.
4. MAINTAIN A MINIMUM OF TEN (10) FEET HORIZONTAL CLEAR DISTANCE SEPARATION BETWEEN POTABLE WATER MAINS/SERVICES AND SANITARY SEWER OR NON-POTABLE IRRIGATION MAINS/SERVICES. POTABLE WATER MAINS/SERVICES ARE TO BE LOCATED 18-INCHES MINIMUM ABOVE THE SANITARY SEWER OR NON-POTABLE IRRIGATION MAINS/SERVICES. IF FIELD CONDITIONS VARY FROM THOSE SHOWN ON THESE PLANS AND THE SANITARY SEWER OR NON-POTABLE MAINS/SERVICES CANNOT BE LOCATED BELOW THE WATER MAIN OR SERVICE, A CLEAR VERTICAL DISTANCE OF EIGHTEEN (18) INCHES BELOW CANNOT BE MAINTAINED, OR A MINIMUM TEN (10) FOOT HORIZONTAL SEPARATION CANNOT BE ACHIEVED, THE CITY SHALL BE CONTACTED IMMEDIATELY TO REVIEW THE SITUATION.
5. IN ALL INSTANCES WHERE A WATER LINE LOWERING, POTABLE OR NON-POTABLE, IS REQUIRED DUE TO UNFORSEEN FIELD CONDITIONS, A DETAILED DRAWING SHALL BE PROVIDED TO THE CITY FOR ACCEPTANCE PRIOR TO PERFORMING THE WORK.
6. CONTRACTOR SHALL NOTIFY THE CITY ONE (1) WEEK PRIOR TO COMMENCING WORK AFTER CITY ACCEPTED CONSTRUCTION DRAWINGS HAVE BEEN DISTRIBUTED AND A PRE-CONSTRUCTION MEETING HAS BEEN HELD WITH THE CITY.
7. CONTRACTOR SHALL POTHOLE ALL EXISTING UTILITIES TO BE CROSSED BY POTABLE WATER, SANITARY SEWER, OR NON-POTABLE IRRIGATION LINES AT LEAST 24 HOURS PRIOR TO CROSSING TO ENSURE 18"MINIMUM CLEARANCE FOR OPEN CUT CROSSINGS AND 36" MINIMUM CLEARANCE FOR BORED CROSSINGS. HORIZONTAL AND VERTICAL LOCATION OF CROSSED EXISTING UTILITIES SHALL BE RECORDED ON THE AS-CONSTRUCTED RECORD DRAWINGS.
8. SHOULD ANY VARIATIONS BEFORE OR DURING CONSTRUCTION TO THE POTABLE WATER DISTRIBUTION, SANITARY SEWER COLLECTION, OR NON-POTABLE IRRIGATION SYSTEM DESIGNS BE CONSIDERED, NOTICE MUST FIRST BE GIVEN TO THE CITY TO DETERMINE IF IT NEEDS ACCEPTANCE BY THE CITY. IF SO, A NEW PLAN SHALL BE DRAWN AND SUBMITTED TO THE CITY FOR ACCEPTANCE BY THE DESIGN ENGINEER 72 HOURS PRIOR TO CONSTRUCTION.
9. FINAL CONSTRUCTION PLANS ARE VALID FOR CONSTRUCTION ONE (1) YEAR FROM THE DATE OF CITY SIGNATURE ACCEPTANCE.
10. ALL POTABLE WATER MAINS, SERVICES, AND HYDRANT LINES SHALL HAVE A MINIMUM COVER OF FIVE (5) FEET AND A MAXIMUM COVER OF SIX (6) FEET UNLESS OTHERWISE INDICATED ON THE ACCEPTED CONSTRUCTION DRAWINGS.
11. ALL NON-POTABLE WATER MAINS AND SERVICES SHALL HAVE A MINIMUM COVER OF THREE AND A HALF (3.5) FEET AND A MAXIMUM COVER OF SIX (6) FEET UNLESS OTHERWISE INDICATED ON THE ACCEPTED CONSTRUCTION DRAWINGS.
12. ALL NEW WATER MAINS SHALL BE BULKHEADED AND TESTED AND APPROVED PRIOR TO CONNECTION TO THE EXISTING WATER SYSTEM. VALVES WHICH PASS TESTING FOR PRESSURE AND LEAKAGE AT THE TIME OF INSTALLATION AND THE TESTING WAS PERFORMED IN THE PRESENCE OF THE CITY MAY BE CONSIDERED AS A BULKHEAD.
13. VERIFICATION SURVEY - TOP OF PIPE ELEVATIONS AT ALL POTABLE AND NON-POTABLE WATER LINE VALVES, AND SANITARY SEWER MANHOLE INVERTS SHALL BE SURVEYED AND PROVIDED TO THE CITY BY THE DESIGN ENGINEER FOR ACCEPTANCE PRIOR TO PAVING CONSTRUCTION. THE VERIFICATION SURVEY SHALL ALSO PROVIDE SEWER PIPE SLOPES AND LENGTH AND PROPOSED FINISHED GROUND ELEVATIONS AT ALL VALVE BOXES AND MANHOLE RIM ELEVATIONS.
14. ALL UTILITY CONDUIT CROSSINGS OF POTABLE WATER, SANITARY SEWER AND NON-POTABLE IRRIGATION LINES SHALL BE ENCASED IN HIGH DENSITY POLYETHYLENE (HDPE) PIPE, WITH A MINIMUM STANDARD DIMENSION RATIO (SDR) 11 ACROSS THE ENTIRE EASEMENT OR RIGHT-OF-WAY WIDTH. THE ENCASEMENT JOINT SHALL BE BUTT FUSED. FLEXIBLE JOINTS ARE NOT ALLOWED.
15. AN A.S.S.E. APPROVED BACKFLOW PREVENTION ASSEMBLY IS REQUIRED ON EACH DOMESTIC WATER SERVICE LINE (WATER SERVICE, DEDICATED FIRE LINE, IRRIGATION SERVICE) IMMEDIATELY AFTER IT ENTERS THE BUILDING. INSTALLATION OF A BACKFLOW PREVENTION ASSEMBLY IS REQUIRED BY FEDERAL AND STATE HEALTH REGULATIONS. THE BACKFLOW PREVENTION ASSEMBLY SHALL BE A REDUCED PRESSURE ZONE (RPZ) DEVICE AND SHALL BE LOCATED NEAR A FLOOR DRAIN. THIS ASSEMBLY MUST BE TESTED BY A CERTIFIED TESTER UPON INSTALLATION AND THEREAFTER ON AN ANNUAL BASIS TO COMPLY WITH CITY CODE AND STATE HEALTH DEPARTMENT REGULATIONS.

STORMWATER GENERAL NOTES:

1. ALL STORM DRAINAGE CONSTRUCTION SHALL CONFORM TO THE CITY OF STERLING'S MOST RECENT STORM DRAINAGE SPECIFICATIONS.
2. RCP SHALL HAVE FLEXIBLE GASKET MATERIAL (WATER TIGHT RUBBER GASKETS) MEETING ASTM C443 AND TYPE 4-G BELL AND SPIGOT JOINTS. DUCTILE IRON PIPE SHALL BE POLYWRAPPED IN ACCORDANCE WITH AWWA STANDARD C-105.
3. BACKFILL MATERIAL MAY BE LOCAL SITE MATERIAL THAT IS WELL-GRADED, NON-COHESIVE GRANULAR MATERIAL FREE OF ROCKS, FROZEN LUMPS, FOREIGN MATERIAL OR STONES GREATER THAN 3" IN ANY DIMENSION, AGGREGATE BASE COURSE, OR FLOWFILL. REMOVE ALL DEBRIS INCLUDING SODA CANS, RAGS, PIPE BANDING MATERIAL, ETC. FROM THE PIPE TRENCH BEFORE BACKFILLING.
4. ALL AREAS IMPACTED BY THE CONSTRUCTION SHALL BE CLEARED OF PROJECT GENERATED DEBRIS BY THE CONTRACTOR AT THE EARLIEST OPPORTUNITY, BUT IN NO CASE SHALL ANY ROADS OR WALKWAYS BE LEFT UNCLEARED AFTER THE COMPLETION OF THE DAY'S WORK. IT SHALL BE THE CONTRACTOR'S RESPONSIBILITY TO PROVIDE THE NECESSARY EQUIPMENT AND MATERIAL TO SATISFACTORILY CLEAN THE ROADWAYS.
5. THE CONTRACTOR SHALL BE REQUIRED TO STREET SWEEP IMPACTED STREETS DAILY, IF THE CITY DEEMS IT NECESSARY, TO KEEP THE STREETS FREE OF MUD AND OTHER DEBRIS DUE TO HAULING OPERATIONS.
6. THE CONTRACTOR IS RESPONSIBLE FOR DUST CONTROL, AND IT SHALL BE THE CONTRACTOR'S RESPONSIBILITY TO PROVIDE THE NECESSARY EQUIPMENT AND MATERIALS TO SATISFACTORILY CONTROL DUST AT ALL TIMES, AND AS DIRECTED BY THE CITY. WATER SHALL BE USED AS THE DUST PALLIATIVE WHERE REQUIRED. THE CONTRACTOR SHALL FURNISH AND SPREAD WATER AT NO ADDITIONAL COST TO THE PROJECT.
7. THE CONTRACTOR IS RESPONSIBLE FOR PROVIDING AS-BUILT DRAWINGS TO THE CITY OF STERTLING.
8. THE CONTRACTOR IS REQUIRED TO HAVE A CURRENT CITY OF STERLING CONTRACTOR'S LICENSE TO PERFORM ANY WORK IN THE PUBLIC RIGHT-OF-WAY OR EASEMENTS.
9. THE CONTRACTOR IS RESPONSIBLE FOR OBTAINING ALL REQUIRED PERMITS PRIOR TO COMMENCEMENT OF ANY WORK ON THE PROJECT.
10. THE CONTRACTOR SHALL BE SOLELY AND COMPLETELY RESPONSIBLE FOR ALL CONDITIONS AT AND ADJACENT TO THE JOB SITE, INCLUDING SAFETY OF ALL PERSONS AND PROPERTY, DURING THE PERFORMANCE OF THE WORK. THIS REQUIREMENT SHALL APPLY CONTINUOUSLY AND SHALL NOT BE LIMITED TO NORMAL WORKING HOURS (7 AM-6 PM). THE DUTY OF THE CITY TO CONDUCT CONSTRUCTION REVIEW OF THE CONTRACTOR'S PERFORMANCE IS NOT INTENDED TO INCLUDE REVIEW OF THE ADEQUACY OF THE CONTRACTOR'S SAFETY MEASURES IN, ON, OR NEAR THE CONSTRUCTION SITE.
11. THE CONTRACTOR SHALL PROVIDE ALL LIGHTS, BARRICADES, FLAG PERSONS, OR OTHER DEVICES NECESSARY TO PROVIDE PUBLIC SAFETY IN ACCORDANCE WITH THE CURRENT MANUAL ON UNIFORM TRAFFIC CONTROL DEVICES, AND THE GREELEY SUPPLEMENT TO THE MANUAL ON UNIFORM TRAFFIC CONTROL.
12. THE CONTRACTOR SHALL NOTIFY ALL UTILITY COMPANIES, PRIOR TO COMMENCING CONSTRUCTION, TO HAVE ALL EXISTING LINES AND CONDUITS FIELD LOCATED.
13. THE SIZE, TYPE, AND LOCATION OF ALL KNOWN UNDERGROUND UTILITIES ARE APPROXIMATE WHEN SHOWN ON THESE DRAWINGS. IT SHALL BE THE RESPONSIBILITY OF THE CONTRACTOR TO LOCATE ALL UNDERGROUND UTILITIES IN THE AREA OF THE WORK BEFORE COMMENCING CONSTRUCTION.

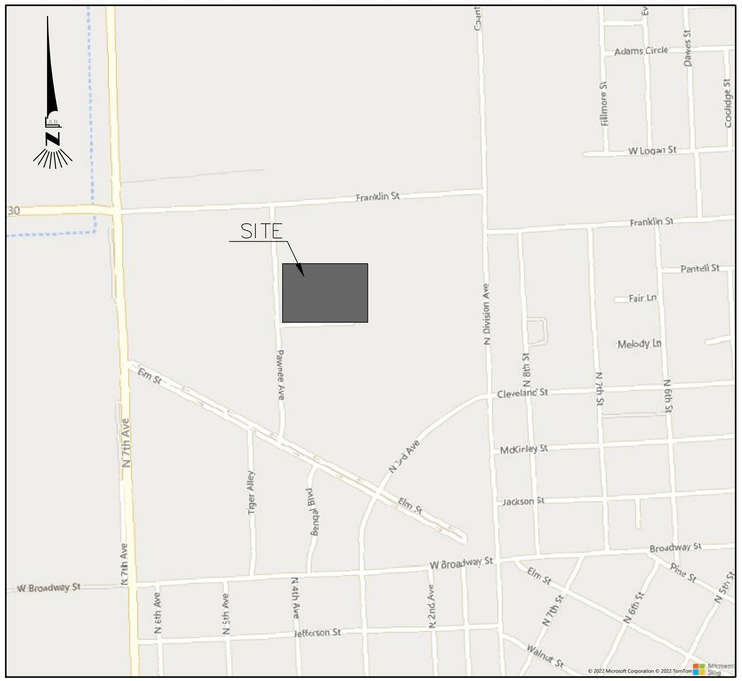

VICINITY MAP

SCALE: 1" = 500'

SHEET INDEX

1	C-1	COVER SHEET
2	C-2	EXISTING CONDITIONS/DEMOLITION PLAN
3	C-3	HORIZONTAL CONTROL/UTILITY PLAN
4	C-4	GRADING & EROSION CONTROL PLAN
5	C-5	DETAIL SHEET 1
6	C-6	DETAIL SHEET 2

PROJECT CONTACTS

OWNER:	CIVIL ENGINEER:
LOGAN COUNTY FAIRGROUNDS 1120 PAWNEE AVE STERLING, CO 80751	i2 CONSULTANTS, INC. TROY W. CAMPBELL, P.E. 16911 POTTS PLACE MEAD, CO 80542 970.217.9148
OWNER REPRESENTATIVE:	**SURVEYOR:**
CAIRN DESIGN, LLC KEN CAUDLE KEN@CAIRNDESIGNLLC.COM 970.286.7968	MAJESTIC SURVEYING, LLC STEVEN PARKS, PLS 1111 DIAMOND VALLEY DR, #104 WINDSOR, CO 80550 970.833.5698

i2 Consultants, Inc.
16911 Potts Place
Mead, Colorado
970.217.9148

DESCRIPTION

BLOCK 2, FAIRMONT ADDITION CITY OF STERLING, LOGAN COUNTY, COLORADO

PARCEL NO: 38052529203901

PROJECT:

LOGAN COUNTY COMMUNITY CENTER ADDITION

SHEET TITLE:

COVER SHEET

ISSUE DATE:

BID/PERMIT
12/16/2022

REVISIONS:

PROJECT NO.:
2208/1080-2

SHEET NO.

C-1

As instruments of service, these drawings and the design represented are the permanent property of Cairn Design, LLC. Reproduction or use of these drawings other than for the project intended, without written consent from the Designer, is prohibited. Unauthorized use will be subject to legal action.

C:\Users\troy\Dropbox\CPhapter\1080-2 Logan County ECD\dwg\Sheets\C01_CV.dwg 12/15/2022 3:51:48 PM

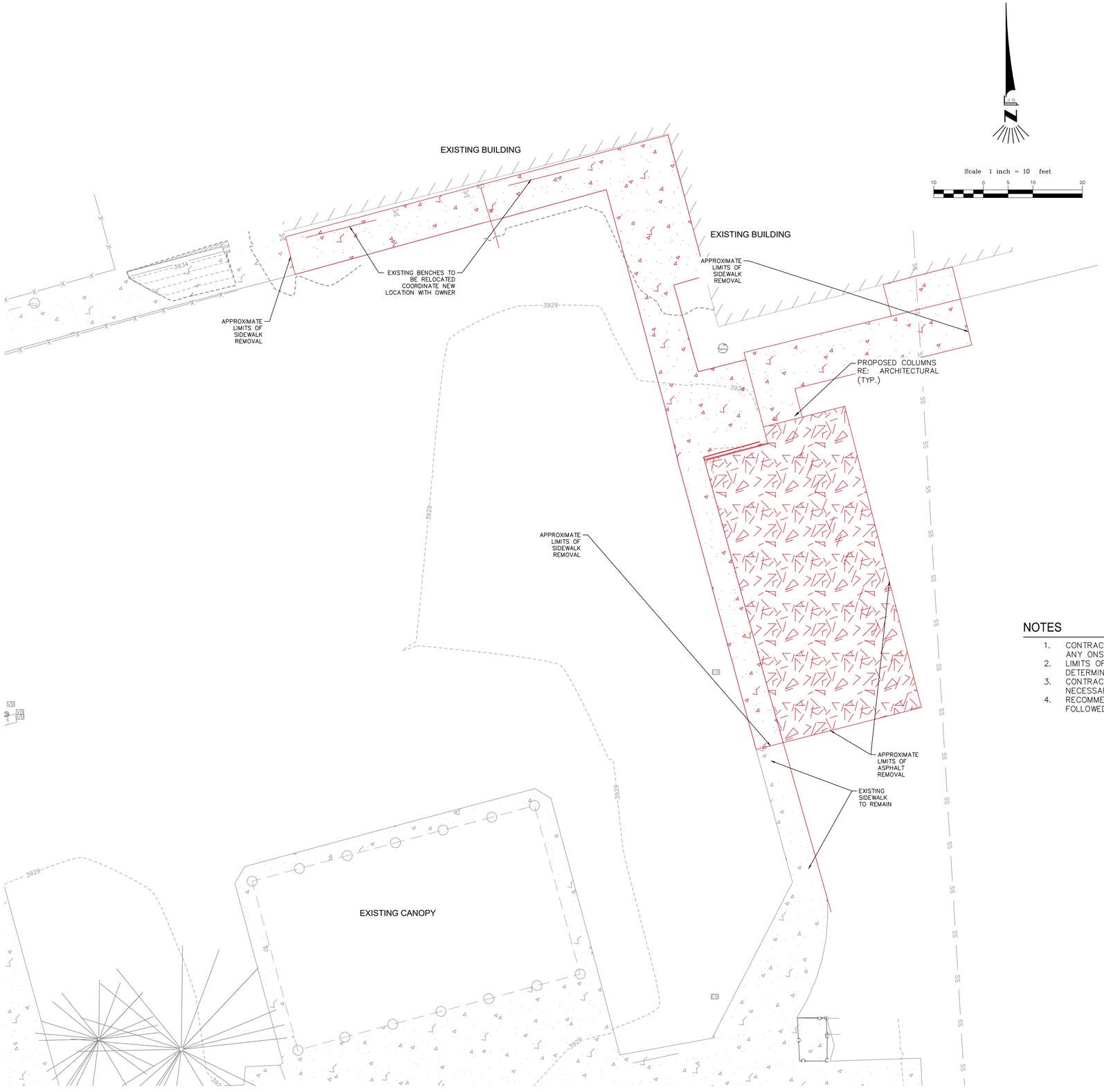
EXISTING BUILDING
EXISTING BUILDING
EXISTING BENCHES TO BE RELOCATED COORDINATE NEW LOCATION WITH OWNER
APPROXIMATE LIMITS OF SIDEWALK REMOVAL
APPROXIMATE LIMITS OF SIDEWALK REMOVAL
PROPOSED COLUMNS RE: ARCHITECTURAL (TYP.)
APPROXIMATE LIMITS OF SIDEWALK REMOVAL
APPROXIMATE LIMITS OF ASPHALT REMOVAL
EXISTING SIDEWALK TO REMAIN
EXISTING CANOPY
3934
3929
3928
3929
3929
3929

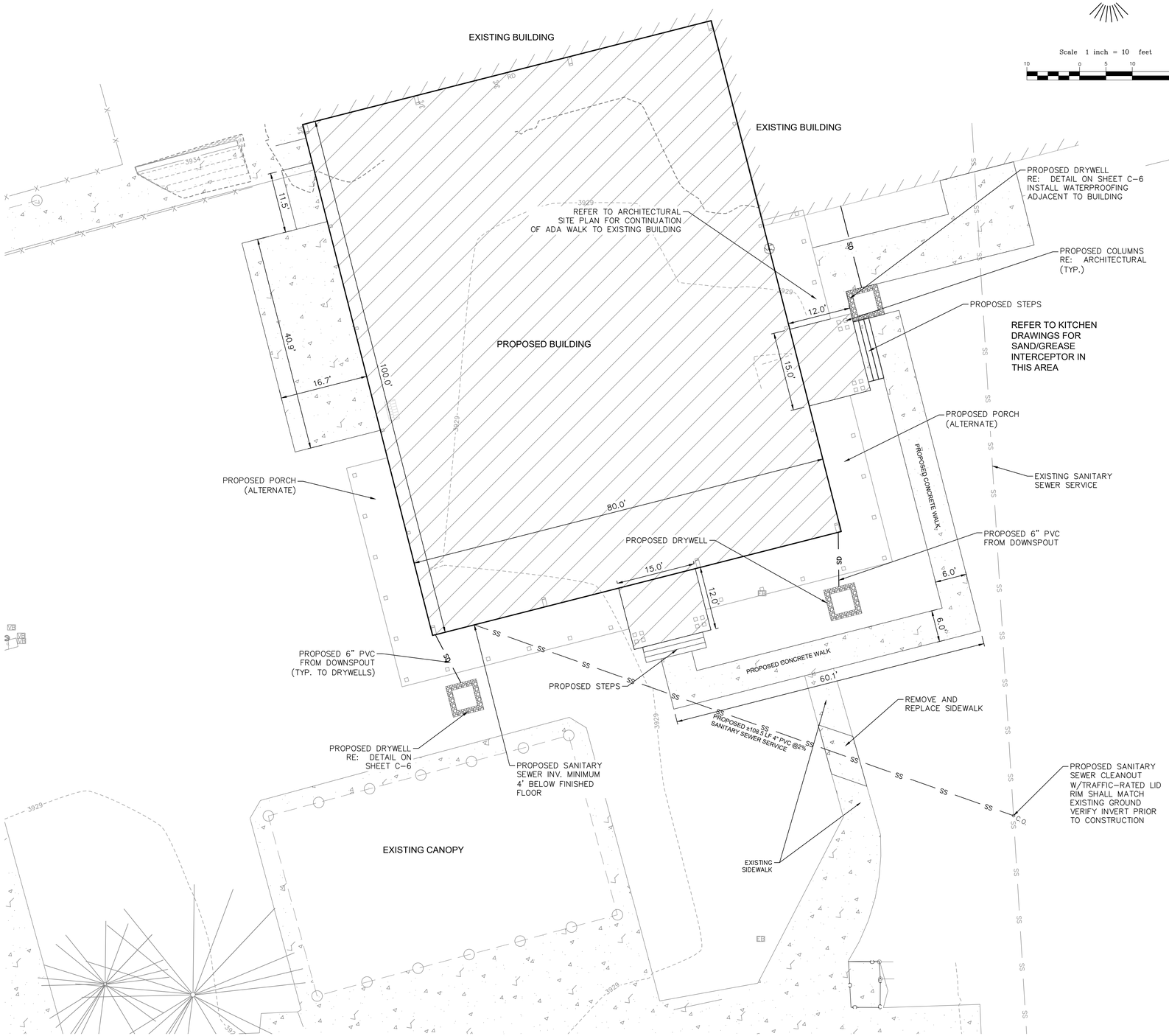

Scale 1 inch = 10 feet

10 0 5 10 20

LEGEND OF SYMBOLS

	EXISTING	PROPOSED
WATER LINES	VALVE, FIRE HYD	W
SANITARY SEWER	MANHOLE	S
ELECTRIC	METER	
GAS	GAS VALVE	
OVERHEAD	POLE, GUY ANCHOR	
TELEPHONE	PEDESTAL, MANHOLE	
STORM DRAIN		
CONTOURS (1')	3930	3930
FLOW DIRECTION		
EXISTING ASPHALT		
EXISTING CONCRETE		
PROPOSED CONCRETE		
PROPOSED ASPHALT		

COLORADO 811

CALL 2-BUSINESS DAYS IN ADVANCE BEFORE YOU DIG, GRADE, OR EXCAVATE FOR MARKING OF UNDERGROUND MEMBER UTILITIES.

NOTES

1. CONTRACTOR SHALL APPLY FOR ALL NECESSARY PERMITS AND APPROVALS PRIOR TO ANY ONSITE DEMOLITION OR REMOVAL.
2. LIMITS OF REMOVAL AND REPLACEMENT ARE APPROXIMATE AS SHOWN AND SHALL BE DETERMINED BY FIELD CONDITIONS.
3. CONTRACTOR SHALL SAWCUT ASPHALT OR CONCRETE IN AREAS OF REMOVAL AS NECESSARY.
4. RECOMMENDATIONS PROVIDED IN THE GEOTECHNICAL ENGINEERING REPORT SHALL BE FOLLOWED.
5. CONTRACTOR SHALL VERIFY THE SIZE, TYPE AND MATERIAL OF ALL UTILITIES PRIOR TO CONSTRUCTION. CONTRACTOR SHALL VERIFY HORIZONTAL AND VERTICAL LOCATIONS OF ALL UTILITIES PRIOR TO CONSTRUCTION AND NOTIFY ENGINEER OF ANY DISCREPANCIES.

SURVEY NOTES:

BENCHMARKS:
HORIZONTAL DATUM:
MODIFIED NAD83/2011 COLORADO STATE PLANE COORDINATE SYSTEM
NORTH ZONE
SCALE FACTOR 1.00020523 (0.99979481)

VERTICAL DATUM:
TOP OF GRATE
ELEVATION = 3928.23

SITE BENCHMARK:
POINT NO. 1000
N: 1483666.99
E: 3634578.24
ELEVATION = 3929.09

CAIRN DESIGN LLC
leading high performance building solutions
1805 Sheely Drive
Fort Collins, CO 80526
voice: (970)-286-7968
cairndesignllc.com

i2 Consultants, Inc.
16911 Potts Place
Mead, Colorado
970.217.9148

PROJECT:

LOGAN COUNTY COMMUNITY CENTER ADDITION

SHEET TITLE:

HORIZONTAL CONTROL /UTILITY PLAN

ISSUE DATE:

BID/PERMIT SET
12/16/2022

REVISIONS:

-
-
-
-

PROJECT NO.:
2208/1080-2

SHEET NO.

C-3

As instruments of service, these drawings and the design represented are the permanent property of Cairn Design, LLC. Reproduction or use of these drawings other than for the project intended, without written consent from the Designer, is prohibited. Unauthorized use will be subject to legal action.

C:\Users\tony\Dropbox\2Projects\1080-2 Logan County EC\DWG\Sheets\CEC_HC.dwg 12/15/2022 3:51:33 PM

GENERAL NOTES

1. CONTRACTOR SHALL APPLY FOR ALL NECESSARY PERMITS AND APPROVALS PRIOR TO ANY ONSITE DEMOLITION OR REMOVAL.
2. LIMITS OF REMOVAL AND REPLACEMENT ARE APPROXIMATE AS SHOWN AND SHALL BE DETERMINED BY FIELD CONDITIONS.
3. CONTRACTOR SHALL SAWCUT ASPHALT OR CONCRETE IN AREAS OF REMOVAL AS NECESSARY.
4. RECOMMENDATIONS PROVIDED IN THE GEOTECHNICAL ENGINEERING REPORT SHALL BE FOLLOWED.

SEEDING REQUIREMENTS AND NOTES

1. RESTORATION OF ANY AREAS DISTURBED BY THE PROPOSED GRADING ACTIVITIES SHALL BE DONE IN COMPLIANCE WITH THE REQUIREMENTS OF LOGAN COUNTY.
2. LOGAN COUNTY REPRESENTATIVE SHALL BE ON SITE DURING ALL SEEDING ACTIVITIES TO INSPECT THE CONDITIONS AND ENSURE COMPLIANCE WITH LOGAN COUNTY STANDARDS.
3. ALL SEED BAGS TAGS MUST BE TURNED IN TO THE LOGAN COUNTY STORMWATER REPRESENTATIVE.

Scale 1 inch = 10 feet

10 0 5 10 20

SURVEY NOTES:

BENCHMARKS:
HORIZONTAL DATUM:
MODIFIED NAD83/2011 COLORADO STATE PLANE COORDINATE SYSTEM
NORTH ZONE
SCALE FACTOR 1.00020523 (0.99979481)

VERTICAL DATUM:
TOP OF GRATE
ELEVATION = 3928.23

SITE BENCHMARK:
POINT NO. 1000
N: 1483666.99
E: 3634578.24
ELEVATION = 3929.09

CALL 2-BUSINESS DAYS IN ADVANCE BEFORE YOU DIG, GRADE, OR EXCAVATE FOR MARKING OF UNDERGROUND MEMBER UTILITIES.

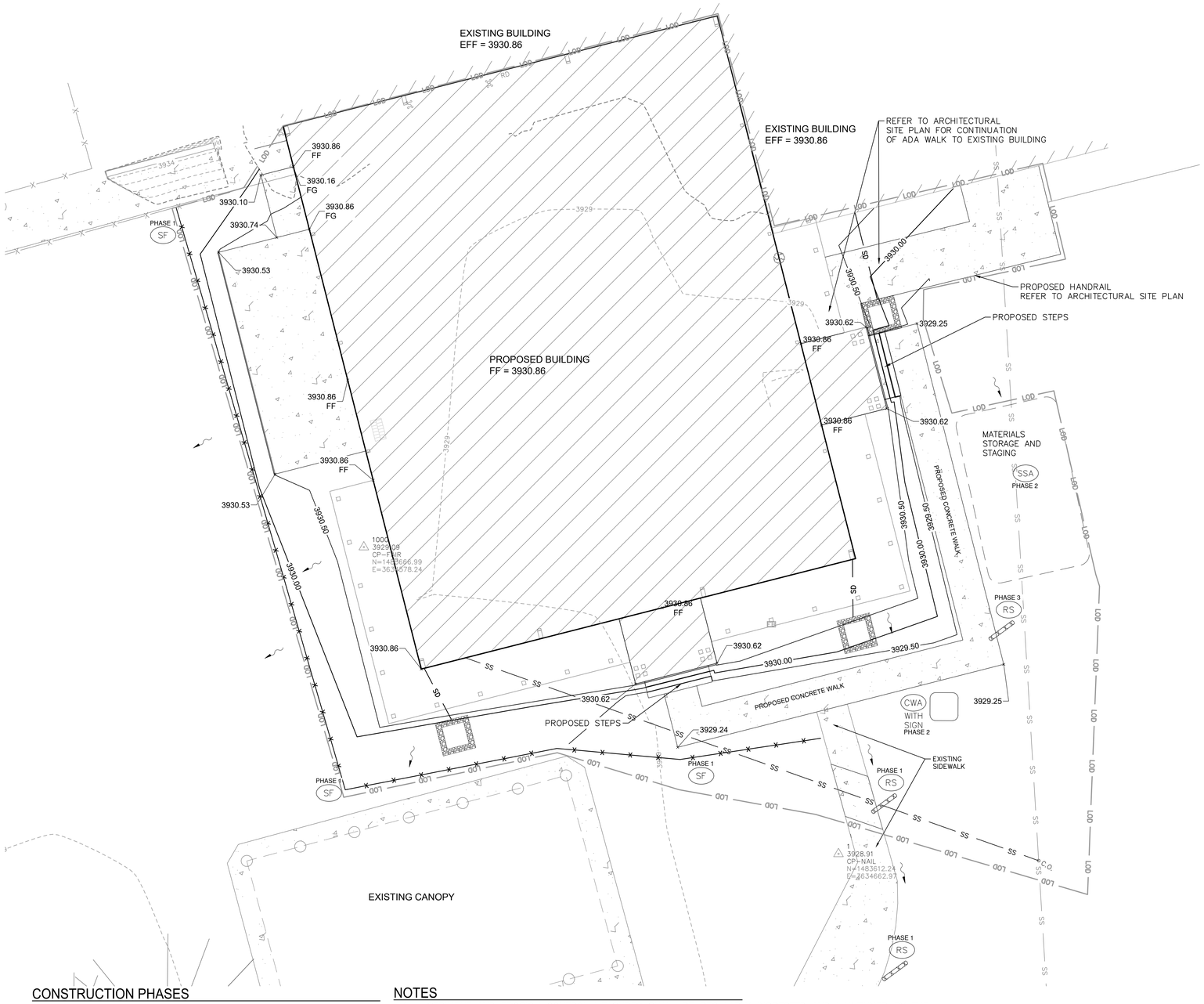

LEGEND OF SYMBOLS

	EXISTING	PROPOSED
WATER LINES	VALVE	W
SANITARY SEWER		S
ELECTRIC	FIRE HYD	E
GAS	METER	G
OVERHEAD	GAS VALVE	OVH
TELEPHONE	POLE	T
STORM DRAIN	GUY ANCHOR	SD
	PEDESTAL	MANHOLE
CONTOURS (1')	3930	3930
FLOW DIRECTION		
ELEVATIONS	4654.85	4654.85
SLOPE		0.7%
EXISTING ASPHALT		
EXISTING CONCRETE		
PROPOSED CONCRETE		
PROPOSED ASPHALT		
CONCRETE WASHOUT AREA		CWA
STAGING AREA		SSA
SILT FENCE		SF
ROCK SOCK		RS
LIMIT OF DISTURBANCE	LOD	LOD

CONSTRUCTION PHASES

1. PHASE 1: GRADING/INITIAL CONSTRUCTION PHASE INCLUDING PERIMETER CONTROLS AND BMPS.
2. PHASE 2: INFRASTRUCTURE PHASE INCLUDING UTILITIES, CURB/GUTTER AND SITE PAVING.
3. PHASE 3: VERTICAL CONSTRUCTION PHASE.
4. PHASE 4: FINAL CONSTRUCTION PHASE TO INCLUDE PERMANENT BMPS, FINAL SURFACE STABILIZATION.

NOTES

1. SEDIMENT AND EROSION CONTROL MEASURES SHALL BE REGULARLY INSPECTED AND MAINTAINED BY THE CONTRACTOR, DURING AND AFTER COMPLETION OF CONSTRUCTION.
2. SITE SEDIMENT AND EROSION CONTROL MEASURES SHALL BE UPDATED AS NECESSARY DURING CONSTRUCTION, AS WARRANTED BY SITE CONDITIONS.
3. PROPER SEDIMENT/EROSION CONTROL MEASURES SHALL BE INSTALLED BY THE CONTRACTOR AROUND ANY STOCKPILE AREAS.
4. THIS PLAN SHALL BE UPDATED AS NECESSARY DURING THE COURSE OF CONSTRUCTION.
5. ALL DETAILS FOR EROSION AND SEDIMENT CONTROL SHALL BE PER THE LOGAN COUNTY STANDARDS AND DETAILS OR MILE HIGH FLOOD DISTRICT DETAILS.

CAIRN DESIGN LLC
leading high performance building solutions
1805 Sheely Drive
Fort Collins, CO 80526
voice: (970)-286-7968
cairndesignllc.com

i2 Consultants, Inc.
16911 Potts Place
Mead, Colorado
970.217.9148

PROJECT:
LOGAN COUNTY COMMUNITY CENTER ADDITION

SHEET TITLE:
GRADING & EROSION CONTROL PLAN

ISSUE DATE:
BID/PERMIT
12/16/2022

REVISIONS:

PROJECT NO.:
2208/1080-2

SHEET NO.
C-4

As instruments of service, these drawings and the design represented are the permanent property of Cairn Design, LLC. Reproduction or use of these drawings other than for the project intended, without written consent from the Designer, is prohibited. Unauthorized use will be subject to legal action.

C:\Users\tony\Dropbox\Projects\1080-2 Logan County EC\DWG\Sheets\LDEC_GR.dwg, 12/15/2022 3:30:48 PM

Concrete Washout Area (CWA) MM-1

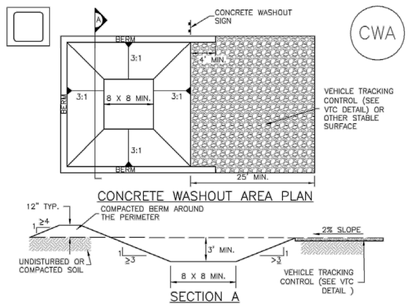

CWA–1. CONCRETE WASHOUT AREA

CWA INSTALLATION NOTES

1. SEE PLAN VIEW FOR:
   –CWA INSTALLATION LOCATION.

2. DO NOT LOCATE AN UNLINED CWA WITHIN 400' OF ANY NATURAL DRAINAGE PATHWAY OR WATERBODY. DO NOT LOCATE WITHIN 1,000' OF ANY WELLS OR DRINKING WATER SOURCES. IF SITE CONSTRAINTS MAKE THIS INFEASIBLE, OR IF HIGHLY PERMEABLE SOILS EXIST ON SITE, THE CWA MUST BE INSTALLED WITH AN IMPERMEABLE LINER (16 MIL MIN. THICKNESS) OR SURFACE STORAGE ALTERNATIVES USING PREFABRICATED CONCRETE WASHOUT DEVICES OR A LINED ABOVE GROUND STORAGE ARE SHOULD BE USED.

3. THE CWA SHALL BE INSTALLED PRIOR TO CONCRETE PLACEMENT ON SITE.

4. CWA SHALL INCLUDE A FLAT SUBSURFACE PIT THAT IS AT LEAST 8' BY 8' SLOPES LEADING OUT OF THE SUBSURFACE PIT SHALL BE 3:1 OR FLATTER. THE PIT SHALL BE AT LEAST 3' DEEP.

5. BERM SURROUNDING SIDES AND BACK OF THE CWA SHALL HAVE MINIMUM HEIGHT OF 1'.

6. VEHICLE TRACKING PAD SHALL BE SLOPED 2% TOWARDS THE CWA.

7. SIGNS SHALL BE PLACED AT THE CONSTRUCTION ENTRANCE, AT THE CWA, AND ELSEWHERE AS NECESSARY TO CLEARLY INDICATE THE LOCATION OF THE CWA TO OPERATORS OF CONCRETE TRUCKS AND PUMP RIGS.

8. USE EXCAVATED MATERIAL FOR PERIMETER BERM CONSTRUCTION.

MM-1 Concrete Washout Area (CWA)

CWA MAINTENANCE NOTES

1. INSPECT BMPs EACH WORKDAY, AND MAINTAIN THEM IN EFFECTIVE OPERATING CONDITION. MAINTENANCE OF BMPs SHOULD BE PROACTIVE, NOT REACTIVE. INSPECT BMPs AS SOON AS POSSIBLE (AND ALWAYS WITHIN 24 HOURS) FOLLOWING A STORM THAT CAUSES SURFACE EROSION, AND PERFORM NECESSARY MAINTENANCE.

2. FREQUENT OBSERVATIONS AND MAINTENANCE ARE NECESSARY TO MAINTAIN BMPs IN EFFECTIVE OPERATING CONDITION. INSPECTIONS AND CORRECTIVE MEASURES SHOULD BE DOCUMENTED THOROUGHLY.

3. WHERE BMPs HAVE FAILED, REPAIR OR REPLACEMENT SHOULD BE INITIATED UPON DISCOVERY OF THE FAILURE.

4. THE CWA SHALL BE REPAIRED, CLEANED, OR ENLARGED AS NECESSARY TO MAINTAIN CAPACITY FOR CONCRETE WASTE. CONCRETE MATERIALS, ACCUMULATED IN PIT, SHALL BE REMOVED ONCE THE MATERIALS HAVE REACHED A DEPTH OF 2'.

5. CONCRETE WASHOUT WATER, WASTED PIECES OF CONCRETE AND ALL OTHER DEBRIS IN THE SUBSURFACE PIT SHALL BE TRANSPORTED FROM THE JOB SITE IN A WATER–TIGHT CONTAINER AND DISPOSED OF PROPERLY.

6. THE CWA SHALL REMAIN IN PLACE UNTIL ALL CONCRETE FOR THE PROJECT IS PLACED.

7. WHEN THE CWA IS REMOVED, COVER THE DISTURBED AREA WITH TOP SOIL, SEED AND MULCH OR OTHERWISE STABILIZED IN A MANNER APPROVED BY THE LOCAL JURISDICTION.

(DETAIL ADAPTED FROM DOUGLAS COUNTY, COLORADO AND THE CITY OF PARKER, COLORADO, NOT AVAILABLE IN AUTOCAD).

NOTE: MANY JURISDICTIONS HAVE BMP DETAILS THAT VARY FROM UDFCD STANDARD DETAILS. CONSULT WITH LOCAL JURISDICTIONS AS TO WHICH DETAIL SHOULD BE USED WHEN DIFFERENCES ARE NOTED.

Stabilized Staging Area (SSA) SM-6

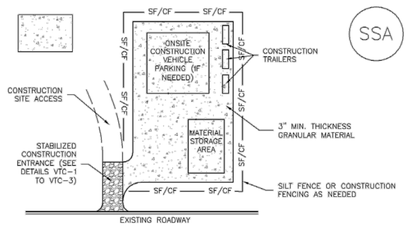

SSA–1. STABILIZED STAGING AREA

STABILIZED STAGING AREA INSTALLATION NOTES

1. SEE PLAN VIEW FOR
   –LOCATION OF STAGING AREA(S).
   –CONTRACTOR MAY ADJUST LOCATION AND SIZE OF STAGING AREA WITH APPROVAL FROM THE LOCAL JURISDICTION.

2. STABILIZED STAGING AREA SHOULD BE APPROPRIATE FOR THE NEEDS OF THE SITE. OVERSIZING RESULTS IN A LARGER AREA TO STABILIZE FOLLOWING CONSTRUCTION.

3. STAGING AREA SHALL BE STABILIZED PRIOR TO OTHER OPERATIONS ON THE SITE.

4. THE STABILIZED STAGING AREA SHALL CONSIST OF A MINIMUM 3" THICK GRANULAR MATERIAL.

5. UNLESS OTHERWISE SPECIFIED BY LOCAL JURISDICTION, ROCK SHALL CONSIST OF DOT SECT. #703, AASHTO #3 COARSE AGGREGATE OR 6" (MINUS) ROCK.

6. ADDITIONAL PERIMETER BMPs MAY BE REQUIRED INCLUDING BUT NOT LIMITED TO SILT FENCE AND CONSTRUCTION FENCING.

STABILIZED STAGING AREA MAINTENANCE NOTES

1. INSPECT BMPs EACH WORKDAY, AND MAINTAIN THEM IN EFFECTIVE OPERATING CONDITION. MAINTENANCE OF BMPs SHOULD BE PROACTIVE, NOT REACTIVE. INSPECT BMPs AS SOON AS POSSIBLE (AND ALWAYS WITHIN 24 HOURS) FOLLOWING A STORM THAT CAUSES SURFACE EROSION, AND PERFORM NECESSARY MAINTENANCE.

2. FREQUENT OBSERVATIONS AND MAINTENANCE ARE NECESSARY TO MAINTAIN BMPs IN EFFECTIVE OPERATING CONDITION. INSPECTIONS AND CORRECTIVE MEASURES SHOULD BE DOCUMENTED THOROUGHLY.

3. WHERE BMPs HAVE FAILED, REPAIR OR REPLACEMENT SHOULD BE INITIATED UPON DISCOVERY OF THE FAILURE.

4. ROCK SHALL BE REAPPLIED OR REGRADED AS NECESSARY IF RUTTING OCCURS OR UNDERLYING SUBGRADE BECOMES EXPOSED.

SM-6 Stabilized Staging Area (SSA)

STABILIZED STAGING AREA MAINTENANCE NOTES

5. STABILIZED STAGING AREA SHALL BE ENLARGED IF NECESSARY TO CONTAIN PARKING, STORAGE, AND UNLOADING/LOADING OPERATIONS.

6. THE STABILIZED STAGING AREA SHALL BE REMOVED AT THE END OF CONSTRUCTION. THE GRANULAR MATERIAL SHALL BE REMOVED OR, IF APPROVED BY THE LOCAL JURISDICTION, USED ON SITE, AND THE AREA COVERED WITH TOPSOIL, SEEDED AND MULCHED OR OTHERWISE STABILIZED IN A MANNER APPROVED BY LOCAL JURISDICTION.

NOTE: MANY MUNICIPALITIES PROHIBIT THE USE OF RECYCLED CONCRETE AS GRANULAR MATERIAL FOR STABILIZED STAGING AREAS DUE TO DIFFICULTIES WITH RE–ESTABLISHMENT OF VEGETATION IN AREAS WHERE RECYCLED CONCRETE WAS PLACED.

NOTE: MANY JURISDICTIONS HAVE BMP DETAILS THAT VARY FROM UDFCD STANDARD DETAILS. CONSULT WITH LOCAL JURISDICTIONS AS TO WHICH DETAIL SHOULD BE USED WHEN DIFFERENCES ARE NOTED.

(DETAILS ADAPTED FROM DOUGLAS COUNTY, COLORADO, NOT AVAILABLE IN AUTOCAD)

Silt Fence (SF) SC-1

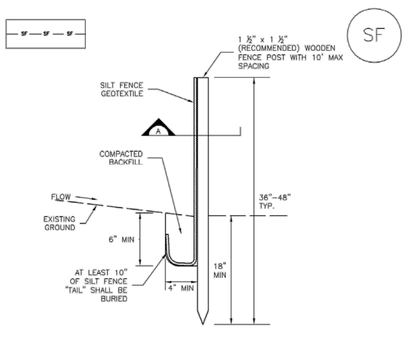

SF–1. SILT FENCE

SC-1 Silt Fence (SF)

SILT FENCE INSTALLATION NOTES

1. SILT FENCE MUST BE PLACED AWAY FROM THE TOE OF THE SLOPE TO ALLOW FOR WATER PONDING. SILT FENCE AT THE TOE OF A SLOPE SHOULD BE INSTALLED IN A FLAT LOCATION AT LEAST SEVERAL FEET (2–5 FT) FROM THE TOE OF THE SLOPE TO ALLOW ROOM FOR PONDING AND DEPOSITION.

2. A UNIFORM 6" X 4" ANCHOR TRENCH SHALL BE EXCAVATED USING TRENCHER OR SILT FENCE INSTALLATION DEVICE. NO ROAD GRADERS, BACKHOES, OR SIMILAR EQUIPMENT SHALL BE USED.

3. COMPACT ANCHOR TRENCH BY HAND WITH A "JUMPING JACK" OR BY WHEEL ROLLING. COMPACTION SHALL BE SUCH THAT SILT FENCE RESISTS BEING PULLED OUT OF ANCHOR TRENCH BY HAND.

4. SILT FENCE SHALL BE PULLED TIGHT AS IT IS ANCHORED TO THE STAKES. THERE SHOULD BE NO NOTICEABLE SAG BETWEEN STAKES AFTER IT HAS BEEN ANCHORED TO THE STAKES.

5. SILT FENCE FABRIC SHALL BE ANCHORED TO THE STAKES USING 1" HEAVY DUTY STAPLES OR NAILS WITH 1" HEADS. STAPLES AND NAILS SHOULD BE PLACED 3" ALONG THE FABRIC DOWN THE STAKE.

6. AT THE END OF A RUN OF SILT FENCE ALONG A CONTOUR, THE SILT FENCE SHOULD BE TURNED PERPENDICULAR TO THE CONTOUR TO CREATE A "J–HOOK." THE "J–HOOK" EXTENDING PERPENDICULAR TO THE CONTOUR SHOULD BE OF SUFFICIENT LENGTH TO KEEP RUNOFF FROM FLOWING AROUND THE END OF THE SILT FENCE (TYPICALLY 10' – 20').

7. SILT FENCE SHALL BE INSTALLED PRIOR TO ANY LAND DISTURBING ACTIVITIES.

SILT FENCE MAINTENANCE NOTES

1. INSPECT BMPs EACH WORKDAY, AND MAINTAIN THEM IN EFFECTIVE OPERATING CONDITION. MAINTENANCE OF BMPs SHOULD BE PROACTIVE, NOT REACTIVE. INSPECT BMPs AS SOON AS POSSIBLE (AND ALWAYS WITHIN 24 HOURS) FOLLOWING A STORM THAT CAUSES SURFACE EROSION, AND PERFORM NECESSARY MAINTENANCE.

2. FREQUENT OBSERVATIONS AND MAINTENANCE ARE NECESSARY TO MAINTAIN BMPs IN EFFECTIVE OPERATING CONDITION. INSPECTIONS AND CORRECTIVE MEASURES SHOULD BE DOCUMENTED THOROUGHLY.

3. WHERE BMPs HAVE FAILED, REPAIR OR REPLACEMENT SHOULD BE INITIATED UPON DISCOVERY OF THE FAILURE.

4. SEDIMENT ACCUMULATED UPSTREAM OF THE SILT FENCE SHALL BE REMOVED AS NEEDED TO MAINTAIN THE FUNCTIONALITY OF THE BMP, TYPICALLY WHEN DEPTH OF ACCUMULATED SEDIMENTS IS APPROXIMATELY 6".

5. REPAIR OR REPLACE SILT FENCE WHEN THERE ARE SIGNS OF WEAR, SUCH AS SAGGING, TEARING, OR COLLAPSE.

6. SILT FENCE IS TO REMAIN IN PLACE UNTIL THE UPSTREAM DISTURBED AREA IS STABILIZED AND APPROVED BY THE LOCAL JURISDICTION, OR IS REPLACED BY AN EQUIVALENT PERIMETER SEDIMENT CONTROL BMP.

7. WHEN SILT FENCE IS REMOVED, ALL DISTURBED AREAS SHALL BE COVERED WITH TOPSOIL, SEEDED AND MULCHED OR OTHERWISE STABILIZED AS APPROVED BY LOCAL JURISDICTION.

(DETAIL ADAPTED FROM TOWN OF PARKER, COLORADO AND CITY OF AURORA, NOT AVAILABLE IN AUTOCAD)

NOTE: MANY JURISDICTIONS HAVE BMP DETAILS THAT VARY FROM UDFCD STANDARD DETAILS. CONSULT WITH LOCAL JURISDICTIONS AS TO WHICH DETAIL SHOULD BE USED WHEN DIFFERENCES ARE NOTED.

SC-5 Rock Sock (RS)

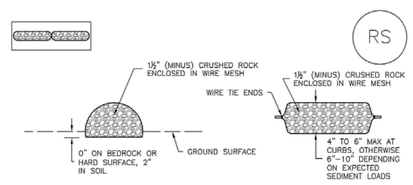

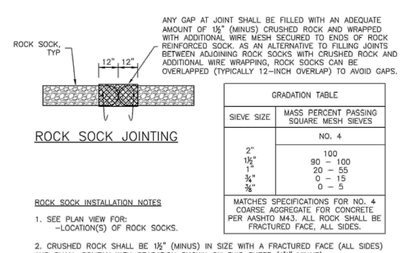

GRADATION TABLE	
SIEVE SIZE	MASS PERCENT PASSING SQUARE MESH SIEVES
	NO. 4
2"	100
1½"	90 – 100
1"	20 – 55
¾"	0 – 15
⅜"	0 – 5
MATCHES SPECIFICATIONS FOR NO. 4 COARSE AGGREGATE FOR CONCRETE PER AASHTO M43. ALL ROCK SHALL BE FRACTURED FACE, ALL SIDES.	

ROCK SOCK INSTALLATION NOTES

1. SEE PLAN VIEW FOR:
   –LOCATION(S) OF ROCK SOCKS.

2. CRUSHED ROCK SHALL BE 1½" (MINUS) IN SIZE WITH A FRACTURED FACE (ALL SIDES) AND SHALL COMPLY WITH GRADATION SHOWN ON THIS SHEET (1½" MINUS).

3. WIRE MESH SHALL BE FABRICATED OF 10 GAGE POULTRY MESH, OR EQUIVALENT, WITH A MAXIMUM OPENING OF ½", RECOMMENDED MINIMUM ROLL WIDTH OF 48"

4. WIRE MESH SHALL BE SECURED USING "HOG RINGS" OR WIRE TIES AT 6" CENTERS ALONG ALL JOINTS AND AT 2" CENTERS ON ENDS OF SOCKS.

5. SOME MUNICIPALITIES MAY ALLOW THE USE OF FILTER FABRIC AS AN ALTERNATIVE TO WIRE MESH FOR THE ROCK ENCLOSURE.

RS–1. ROCK SOCK PERIMETER CONTROL

Rock Sock (RS) SC-5

ROCK SOCK MAINTENANCE NOTES

1. INSPECT BMPs EACH WORKDAY, AND MAINTAIN THEM IN EFFECTIVE OPERATING CONDITION. MAINTENANCE OF BMPs SHOULD BE PROACTIVE, NOT REACTIVE. INSPECT BMPs AS SOON AS POSSIBLE (AND ALWAYS WITHIN 24 HOURS) FOLLOWING A STORM THAT CAUSES SURFACE EROSION, AND PERFORM NECESSARY MAINTENANCE.

2. FREQUENT OBSERVATIONS AND MAINTENANCE ARE NECESSARY TO MAINTAIN BMPs IN EFFECTIVE OPERATING CONDITION. INSPECTIONS AND CORRECTIVE MEASURES SHOULD BE DOCUMENTED THOROUGHLY.

3. WHERE BMPs HAVE FAILED, REPAIR OR REPLACEMENT SHOULD BE INITIATED UPON DISCOVERY OF THE FAILURE.

4. ROCK SOCKS SHALL BE REPLACED IF THEY BECOME HEAVILY SOILED, OR DAMAGED BEYOND REPAIR.

5. SEDIMENT ACCUMULATED UPSTREAM OF ROCK SOCKS SHALL BE REMOVED AS NEEDED TO MAINTAIN FUNCTIONALITY OF THE BMP, TYPICALLY WHEN DEPTH OF ACCUMULATED SEDIMENTS IS APPROXIMATELY ½ OF THE HEIGHT OF THE ROCK SOCK.

6. ROCK SOCKS ARE TO REMAIN IN PLACE UNTIL THE UPSTREAM DISTURBED AREA IS STABILIZED AND APPROVED BY THE LOCAL JURISDICTION.

7. WHEN ROCK SOCKS ARE REMOVED, ALL DISTURBED AREAS SHALL BE COVERED WITH TOPSOIL, SEEDED AND MULCHED OR OTHERWISE STABILIZED AS APPROVED BY LOCAL JURISDICTION.

(DETAIL ADAPTED FROM TOWN OF PARKER, COLORADO AND CITY OF AURORA, COLORADO, NOT AVAILABLE IN AUTOCAD)

NOTE: MANY JURISDICTIONS HAVE BMP DETAILS THAT VARY FROM UDFCD STANDARD DETAILS. CONSULT WITH LOCAL JURISDICTIONS AS TO WHICH DETAIL SHOULD BE USED WHEN DIFFERENCES ARE NOTED.

NOTE: THE DETAILS INCLUDED WITH THIS FACT SHEET SHOW COMMONLY USED, CONVENTIONAL METHODS OF ROCK SOCK INSTALLATION IN THE DENVER METROPOLITAN AREA. THERE ARE MANY OTHER SIMILAR PROPRIETARY PRODUCTS ON THE MARKET. UDFCD NEITHER NOORSES NOR DISCOURAGES USE OF PROPRIETARY PROTECTION PRODUCTS; HOWEVER, IN THE EVENT PROPRIETARY METHODS ARE USED, THE APPROPRIATE DETAIL FROM THE MANUFACTURER MUST BE INCLUDED IN THE SWMP AND THE BMP MUST BE INSTALLED AND MAINTAINED AS SHOWN IN THE MANUFACTURER'S DETAILS.

C:\Users\tony\Dropbox\AProjects\1080-2 Logan County ECCW\05Sheets\C2SC_01.dwg, 12/15/2022 3:52:01 PM

COLORADO 811
CALL 2-BUSINESS DAYS IN ADVANCE BEFORE YOU DIG, GRADE, OR EXCAVATE FOR MARKING OF UNDERGROUND MEMBER UTILITIES.

CAIRN DESIGN LLC
leading high performance building solutions
1805 Sheely Drive
Fort Collins, CO 80526
voice: (970)-286-7968
cairndesignllc.com

i2 Consultants, Inc.
16911 Potts Place
Mead, Colorado
970.217.9148

PROJECT:

LOGAN COUNTY COMMUNITY CENTER ADDITION

SHEET TITLE:

DETAIL SHEET 1

ISSUE DATE:

BID/PERMIT
12/16/2022

REVISIONS:

PROJECT NO.:
2208/1080-2

SHEET NO.

C-5

As instruments of service, these drawings and the design represented are the permanent property of Cairn Design, LLC. Reproduction or use of these drawings other than for the project intended, without written consent from the Designer, is prohibited.

DRYWELL DETAIL

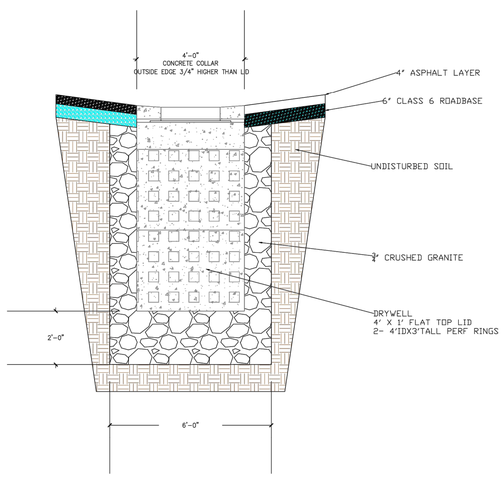

A / 6 DRYWELL DETAIL
NTS

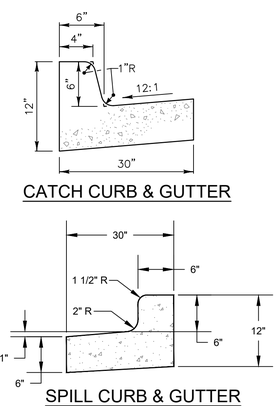

B / 6 CURB & GUTTER DETAILS
NTS

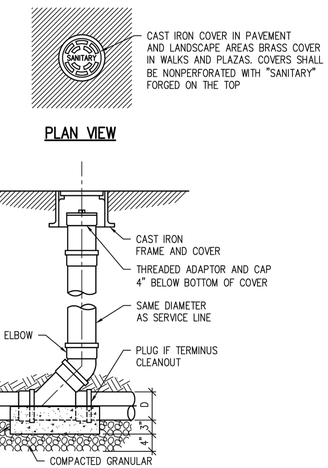

NOTES:

1. CLEANOUT SHALL BE CONSTRUCTED SO THAT SURFACE LOAD WILL NOT BE TRANSFERRED TO MAIN.
2. SERVICE LINE CLEANOUT MAY BE INSTALLED APPROXIMATELY 5 FEET OUTSIDE THE BUILDING FOUNDATION.
3. A CLEANOUT IS REQUIRED ON ALL SERVICE LINES EVERY 100 FEET, AT EVERY "Y" OR AFTER A COMBINE TOTAL 135 DEGREES OF BEND.

SCALE: NTS

C / 10 SANITARY SEWER CLEANOUT
NTS

CALL 2-BUSINESS DAYS IN ADVANCE BEFORE YOU DIG, GRADE, OR EXCAVATE FOR MARKING OF UNDERGROUND MEMBER UTILITIES.

CAIRN DESIGN LLC
leading high performance building solutions
1805 Sheely Drive
Fort Collins, CO 80526
voice: (970)-286-7968
cairndesignllc.com

i2 Consultants, Inc.
16911 Potts Place
Mead, Colorado
970.217.9148

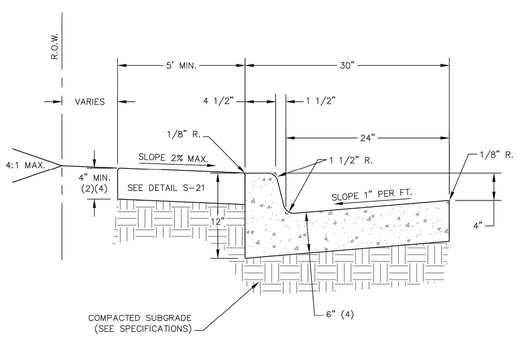

NOTES:

1. WHEN CONSTRUCTING ATTACHED SIDEWALK, CONTRACTION JOINTS FOR SIDEWALKS SHALL MATCH CURB AND GUTTER, MAXIMUM SPACING OF TEN (10) FEET.
2. AT RESIDENTIAL DRIVEWAYS, THE SIDEWALK THICKNESS SHALL BE INCREASED TO SIX (6) INCHES.
3. EXPANSION JOINTS REQUIRED AT 400 FOOT MAXIMUM SPACING. ADDITIONAL JOINTS MAY BE REQUIRED AT THE DISCRETION OF THE ENGINEER. SEE JOINT DETAILS.
4. AT ALLEYS AND COMMERCIAL DRIVEWAYS, THE CURB AND SIDEWALK THICKNESS SHALL BE INCREASED TO EIGHT (8) INCHES.
5. CONCRETE SURFACES TO RECEIVE A LIGHT BROOM FINISH.

D / 6 VERTICAL FACE CURB & GUTTER
NTS

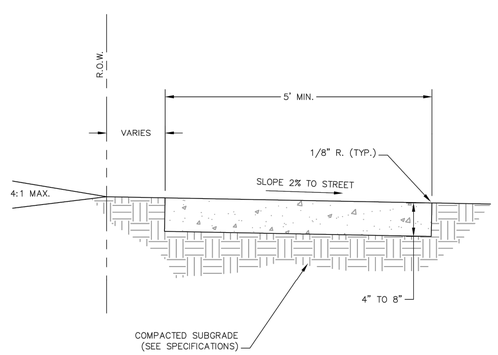

NOTES:

1. MAXIMUM SPACING OF CONTRACTION JOINTS IS TEN (10) FEET.
2. AT RESIDENTIAL DRIVEWAYS, THE SIDEWALK THICKNESS SHALL BE INCREASED TO SIX (6) INCHES.
3. EXPANSION JOINTS REQUIRED AT 400 FOOT MAXIMUM SPACING. ADDITIONAL JOINTS MAY BE REQUIRED AT THE DISCRETION OF THE ENGINEER. SEE JOINT DETAILS.
4. AT ALLEYS AND COMMERCIAL DRIVEWAYS, THE SIDEWALK THICKNESS SHALL BE INCREASED TO EIGHT (8) INCHES.
5. CONCRETE SURFACES TO RECEIVE A LIGHT BROOM FINISH.

E / 6 DETACHED SIDEWALK DETAIL
NTS

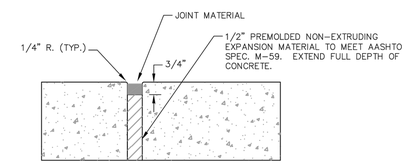

EXPANSION JOINT

NOTE FOR EXPANSION JOINTS:

EXPANSION JOINTS REQUIRED AT 400 FOOT MAXIMUM SPACING. ADDITIONAL JOINTS MAY BE REQUIRED AT THE DISCRETION OF THE ENGINEER.

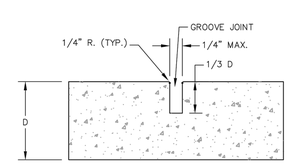

CONTRACTION JOINT

NOTES FOR CONTRACTION JOINTS:

1. FORM WITH TOOL TEMPLATE OR SAWCUT JOINTS.
2. SAWCUT JOINTS, IF USED, SHALL BEGIN AS SOON AS CONCRETE IS HARDENED SUFFICIENTLY TO PERMIT SAWING WITHOUT EXCESSIVE RAVELING AND BEFORE UNCONTROLLED CRACKING OCCURS.
3 MAXIMUM DISTANCE BETWEEN JOINTS IS TEN (10) FEET AND MINIMUM DISTANCE IS FIVE (5) FEET.

F / 6 CONCRETE JOINT DETAILS
NTS

PROJECT:

LOGAN COUNTY COMMUNITY CENTER ADDITION

SHEET TITLE:

DETAIL SHEET 2

ISSUE DATE:

BID/PERMIT
12/16/2022

REVISIONS:

PROJECT NO.:
2208/1080-2

SHEET NO.

C-6

As instruments of service, these drawings and the design represented are the permanent property of Cairn Design, LLC. Reproduction or use of these drawings other than for the project intended, without written consent from the Designer, is prohibited. Unauthorized use will be subject to legal action.

C:\Users\tyler\Dropbox\CPhegacies\1080-2 Logan County ECCW\CDSheets\C6D_DT.dwg | 12/12/2022 3:52:18 PM

STRUCTURAL GENERAL NOTES

DESIGN LOADS:

1. DESIGN LOADS: 2018 INTERNATIONAL BUILDING CODE WITH LOGAN COUNTY AMENDMENTS, ASCE 7-16
2. RISK CATEGORY: II STANDARD
3. ROOFS:
   - A. ROOF DEAD LOAD — TO BE DETERMIEND BY PEMB SUPPLIER
   - B. ROOF LIVE LOAD — 20 PSF
   - C. GROUND SNOW LOAD, Pg — 30 PSF
   - D. FLAT-ROOF SNOW LOAD, Pf — 21 PSF
   - E. SNOW EXPOSURE FACTOR, Ce — 1.0
   - F. SNOW IMPORTANCE FACTOR, Is — 1.0
   - G. THERMAL FACTOR, Ct — 1.0
4. WIND:
   - A. BASIC DESIGN WIND SPEED, V_{ULT}, (3-SECOND GUST) — 115 MPH
   - B. ALLOWABLE STRESS DESIGN WIND SPEED, V_{ASD}, (3-SECOND GUST) — 90 MPH
   - C. INTERNAL PRESSURE COEFFICIENT — 0.18 (ENCLOSED)
   - D. WIND EXPOSURE — C
   - E.

FOUNDATION DESIGN:

1. REFER TO SOILS REPORT NO. 3222011 BY EEC, DATED NOVEMBER 18, 2022.
2. GEOTECHNICAL ENGINEER SHALL VERIFY SOIL CONDITIONS AND TYPES DURING EXCAVATION AND PRIOR TO PLACEMENT OF FORMWORK OR CONCRETE.
3. MINIMUM FROST DEPTH SHALL BE 2'-6 BELOW EXTERIOR GRADE.

FOOTINGS:

1. DESIGN OF FOOTINGS IS BASED ON
   - A. MAXIMUM ALLOWABLE BEARING PRESSURE 1,000 PSF
2. BEAR ON THE NATURAL UNDISTURBED SOIL OR COMPACTED STRUCTURAL FILL. EXTERIOR FOOTINGS SHALL BEAR BELOW FROST DEPTH. REFERENCE GEOTECHNICAL REPORT FOR SPECIFIC SUBGRADE PREPARATION REQUIREMENTS.

REINFORCED CONCRETE:

1. DESIGN IS BASED ON ACI 318 "BUILDING CODE REQUIREMENTS FOR STRUCTURAL CONCRETE."
2. CONCRETE WORK SHALL CONFORM TO ACI 301 "STANDARD SPECIFICATIONS FOR STRUCTURAL CONCRETE."
3. STRUCTURAL CONCRETE SHALL HAVE THE FOLLOWING PROPERTIES:

INTENDED USE	EXPOSURE CLASS	fc, PSI 28 DAYS	MAX W/CM RATIO	MAXIMUM AGGREGATE	SLUMP, INCHES (+/- 1")	AIR CONTENT PERCENT (+/- 1.5%)	CEMENT TYPE	ADMIXTURES / COMMENTS
FOOTINGS	F0-S0-W0-C1	3000	0.52	3/4" STONE	5	N/A	I/II	
STEM WALLS & PILASTERS	F2-S0-W0-C1	4500	0.45	3/4" STONE	4	6%	I/II	
INTERIOR SLAB ON GRADE	F0-S0-W0-C0	4000	0.45	3/4" STONE	4	N/P	I/II	
EXTERIOR SLAB ON GRADE	F3-S0-W0-C2	5000	0.40	3/4" STONE	4	6%	I/II	25% MAX FLY ASH

4. CONCRETE MIX TABLE NOTES:
   - A. SLUMP VALUES INDICATED ARE SUGGESTED BASED ON USE AND TYPICAL PLACEMENT METHODS. CONTRACTOR MAY ADJUST SLUMP AS NECESSARY FOR FIELD CONDITIONS AND INSTALLATION METHOD USED PROVIDED REMAINING REQUIREMENTS ARE MET.
   - B. AIR CONTENT:
     - a. N/P: AIR ENTRAINING ADMIXTURES NOT PERMITTED, ENTRAPPED AIR ONLY
     - b. N/A: NOT APPLICABLE, NO STRUCTURAL AIR CONTENT REQUIREMENTS
   - C. SHRINKAGE STRAIN: MIXES NOTED AS "SHRINKAGE XX% " SHALL BE LIMITED TO A MAXIMUM DRYING SHRINKAGE (0.05% UNLESS NOTED OTHERWISE) AT 28 DAYS (500 MICROSTRAIN) AS MEASURED BY ASTM C157. SHRINKAGE TEST RESULTS TO BE INCLUDED WITH MIX DESIGN SUBMITTAL.
   - D. GENERAL CONTRACTOR TO COORDINATE CONCRETE MOISTURE LEVEL AND ANTICIPATED MOISTURE MITIGATION PROCEDURES WITH CONCRETE SUPPLIER/MIX DESIGNER AND OTHER AFFECTED SUBCONTRACTORS (INCLUDING BUT NOT LIMITED TO FLOORING) TO ADDRESS ALL POTENTIAL SCHEDULE AND INSTALLATION CONFLICTS
5. DETAILING, FABRICATION, AND PLACEMENT OF REINFORCING STEEL SHALL BE IN ACCORDANCE WITH ACI 315 "DETAILS AND DETAILING OF CONCRETE REINFORCEMENT."
6. WELDED WIRE FABRIC SHALL CONFORM TO ASTM A1064.
7. REINFORCING BARS SHALL CONFORM TO ASTM A615, GRADE 60, EXCEPT BARS SHOWN TO BE FIELD-BENT SHALL BE ASTM A706, GRADE 60.
8. UNLESS NOTED OTHERWISE ON THE STRUCTURAL DRAWINGS, LAP BARS PER THE CONCRETE LAP SPLICE SCHEDULE.
9. AT CORNERS AND INTERSECTIONS, MAKE HORIZONTAL BARS CONTINUOUS OR PROVIDE MATCHING CORNER BARS FOR EACH LAYER OF REINFORCEMENT.
10. TRIM OPENINGS IN WALLS AND SLABS WITH (2) #5 FOR EACH LAYER OF REINFORCEMENT, FULLY DEVELOPED BY EXTENSION OR HOOK.
11. IN CONTINUOUS MEMBERS, SPLICE TOP BARS AT MID-SPAN AND SPLICE BOTTOM BARS OVER SUPPORTS.
12. FORM INTERMITTENT SHEAR KEYS AT ALL CONSTRUCTION JOINTS AND AS SHOWN ON THE STRUCTURAL DRAWINGS.
13. EXCEPT AS NOTED ON THE DRAWINGS, CONCRETE PROTECTION FOR REINFORCEMENT IN CAST-IN-PLACE CONCRETE SHALL BE AS FOLLOWS:
    - A. CAST AGAINST AND PERMANENTLY EXPOSED TO EARTH: 3"
    - B. EXPOSED TO EARTH OR WEATHER:
      - 1. #6 THROUGH #18 BARS — 2"
      - 2. #5 BAR, W31 OR D31 WIRE, AND SMALLER — 1-1/2"
    - C. NOT EXPOSED TO WEATHER OR IN CONTACT WITH GROUND:
      - 1. SLABS, WALLS, JOISTS: #11 BARS AND SMALLER — 3/4"
      - 2. BEAMS AND COLUMNS:
        - a. PRIMARY REINFORCEMENT — 1-1/2"
        - b. STIRRUPS, TIES, SPIRALS — 1-1/2"
14. FIBER ADMIXTURE SHALL BE 100% VIRGIN POLYPROPYLENE, FIBRILLATED FIBERS, TYPE III 4.1.3, PERFORMANCE LEVEL ONE, PER ASTM C1116.
15. ANCHOR BOLTS AND RODS FOR BEAM AND COLUMN-BEARING PLATES SHALL BE PLACED WITH SETTING TEMPLATES.

POST-INSTALLED ANCHORS

1. ALL CAST-IN-PLACE ANCHORS DESIGNED IN ACCORDANCE WITH ACI 318.
2. POST-INSTALLED ANCHORS SHALL ONLY BE USED WHERE SPECIFIED ON THE CONSTRUCTION DOCUMENTS. THE CONTRACTOR SHALL OBTAIN APPROVAL FROM THE ENGINEER-OF-RECORD PRIOR TO INSTALLING POST-INSTALLED ANCHORS IN PLACE OF MISSING OR MISPLACED CAST-IN-PLACE ANCHORS.
3. CARE SHALL BE TAKEN IN PLACING POST-INSTALLED ANCHORS TO AVOID CONFLICTS WITH EXISTING REBAR. EXISTING REINFORCING BARS SHALL NOT BE CUT UNLESS APPROVED BY THE EOR.
4. ALL ANCHORS MUST BE INSTALLED IN STRICT ACCORDANCE WITH THE MANUFACTURER'S PRINTED INSTALLATION INFORMATION (MPII) IN CONJUNCTION WITH EDGE DISTANCE, SPACING, AND EMBEDMENT DEPTH AS INDICATED ON THE DRAWINGS. HOLES SHALL BE DRILLED AND CLEANED IN ACCORDANCE WITH THE MPII.
5. SUBSTITUTION REQUESTS, FOR PRODUCTS OTHER THAN THOSE SPECIFIED, SHALL BE SUBMITTED BY THE CONTRACTOR TO THE ENGINEER-OF-RECORD ALONG WITH CALCULATIONS THAT ARE PREPARED & SEALED BY A REGISTERED PROFESSIONAL ENGINEER; REGISTRATION MUST BE IN THE STATE IN WHICH THE PROJECT IS LOCATED. THE CALCULATIONS SHALL DEMONSTRATE THAT THE SUBSTITUTED PRODUCT IS CAPABLE OF ACHIEVING EQUIVALENT PERFORMANCE VALUES (MINIMUM) OF THE SPECIFIED PRODUCT USING THE APPROPRIATE DESIGN PROCEDURE AND/OR STANDARD(S) AS REQUIRED BY THE AUTHORITY HAVING JURISDICTION.
6. THE CONTRACTOR SHALL ARRANGE FOR A MANUFACTURER'S FIELD REPRESENTATIVE TO PROVIDE INSTALLATION TRAINING FOR ALL PRODUCTS TO BE USED, PRIOR TO THE ANCHOR INSTALLATION. A RECORD OF TRAINING SHALL BE KEPT ON SITE AND MADE AVAILABLE TO THE EOR/ SPECIAL INSPECTOR AS REQUESTED.
7. ADHESIVE ANCHORS INSTALLED IN HORIZONTAL TO VERTICALLY OVERHEAD ORIENTATION THAT SUPPORT SUSTAINED TENSION LOADS SHALL BE DONE BY A CERTIFIED ANCHOR INSTALLER (AAI) AS CERTIFIED THROUGH ACI/CRSI (ACI 318-11 D 9.2.2, ACI 318-14 17.8.2.2). PROOF OF CURRENT CERTIFICATION SHALL BE SUBMITTED TO THE EOR FOR APPROVAL PRIOR TO COMMENCEMENT OF INSTALLATION.
8. ADHESIVE ANCHORS MUST BE INSTALLED IN CONCRETE AGED A MINIMUM OF 21 DAYS (ACI 318-11 D 2.2, ACI 318-14 17.1.2)
9. ALL POST-INSTALLED ANCHORS SHALL BE INSTALLED IN DRY HOLES THAT HAVE BEEN DRILLED, CLEANED, AND PREPARED IN STRICT ACCORDANCE WITH THE MANUFACTURER'S PRINTED INSTALLATION INFORMATION AND THE RESPECTIVE ICC-ES EVALUATION REPORTS.
10. PROVIDE SPECIAL INSPECTION FOR ALL MECHANICAL AND ADHESIVE ANCHORS PER THE APPLICABLE BUILDING CODE AND PER THE CURRENT ICC-ES REPORT (IBC TABLE 1705.3 NOTE B).

CONCRETE POST-INSTALLED ANCHORS			
ANCHOR TYPE	DEWALT	HILTI	SIMPSON
EXPANSION	POWER-STUD+ SD2 (ICC ESR-2502)	KWIK BOLT TZ2 (ICC ESR-4266)	STRONG-BOLT 2 (ICC ESR-3037)
SCREW	SCREW-BOLT+ (ICC ESR-3889)	KWIK HUS-EZ (ICC ESR-3027)	TITEN HD (ICC ESR-2713)
ADHESIVE	AC200+ (ICC ESR-4027)	HIT HY-200 V3 (ICC ESR-4868)	AT-XP (UES ER-263)

MASONRY POST-INSTALLED ANCHORS			
ANCHOR TYPE	DEWALT	HILTI	SIMPSON
EXPANSION	POWER-STUD+ SD1 (ICC ESR-2966)	KWIK BOLT TZ2 (ICC ESR-4561)	WEDGE-ALL (ICC ESR-1396)
SCREW	SCREW-BOLT+ (ICC ESR-4042)	KWIK HUS-EZ (ICC ESR-3056)	TITEN HD (ICC ESR-1056)
ADHESIVE	AC100+ GOLD (ICC ESR-3200)	HIT HY-270 (ICC ESR-4143 / 4144)	AT-XP (UES ER-281)

STRUCTURAL MASONRY:

1. DESIGN IS BASED ON ACI 530/ASCE 5/TMS 402, "BUILDING CODE REQUIREMENTS FOR MASONRY STRUCTURES"
2. 28-DAY COMPRESSIVE STRENGTH OF MASONRY ASSEMBLY USED FOR DESIGN IS 2,000 PSI, BASED ON NET-BEDDED AREA.
3. HOLLOW LOAD-BEARING CONCRETE MASONRY UNITS (CMU) SHALL BE LIGHTWEIGHT, 85 TO 105 PCF DENSITY, CONFORMING TO ASTM C90, WITH A MINIMUM 28-DAY COMPRESSIVE STRENGTH OF 2,000 PSI BASED ON AVERAGE NET AREA.
4. FACING BRICK SHALL CONFORM TO ASTM C216 GRADE SW.
5. BUILDING BRICK SHALL CONFORM TO ASTM C62 GRADE SW.
6. HOLLOW BRICK SHALL CONFORM TO ASTM C652, GRADE SW.
7. MORTAR SHALL BE TYPE S CONFORMING TO ASTM C270.
8. MASONRY CEMENT SHALL NOT BE USED UNLESS PART OF A PRE-PACKAGED MORTAR OR GROUT MIX APPROVED BY THE STRUCTURAL ENGINEER.
9. ADMIXTURES SHALL NOT BE USED UNLESS APPROVED BY THE ARCHITECT AND/OR STRUCTURAL ENGINEER.
10. GROUT USED IN MASONRY WALLS AND BLOCK CELLS SHALL BE COARSE GROUT, AS DEFINED BY ARTICLE 2.2 OF TMS 602/ACI530.1/ASCE 6, WITH A MINIMUM CUBE STRENGTH = 2,000 PSI OR 3,000 PSI CONCRETE USING 3/8" DIAMETER AGGREGATE AND PLACED BY VIBRATING UNLESS AN APPROVED SELF-CONSOLIDATING MIX IS USED.
11. PLACEMENT OF MORTAR, GROUT, MASONRY UNITS AND WALL TIES SHALL COMPLY WITH TMS 602 / ACI 530.1 / ASCE 6.
12. PROVIDE MORTAR FOR FULL THICKNESS OF SHELL IN ALL HEAD AND BED JOINTS.
13. 'LOW-LIFT' GROUTING SHALL NOT EXCEED 5 FEET IN HEIGHT UNLESS ACI 530.1 'HIGH-LIFT' GROUTING PROCEDURES ARE REVIEWED AND APPROVED BY THE ARCHITECT AND STRUCTURAL ENGINEER.
14. REINFORCING BARS SHALL HAVE MATERIAL PROPERTIES AS SPECIFIED FOR REINFORCED CONCRETE. LAP BARS PER THE LAP SPLICE SCHEDULE (48 DIAMETERS MINIMUM) UNLESS OTHERWISE NOTED ON THE STRUCTURAL DRAWINGS.
15. REINFORCEMENT SHALL BE SECURED AGAINST DISPLACEMENT PRIOR TO GROUTING BY WIRE BAR LOCATORS OR OTHER SUITABLE DEVICES AT INTERVALS NOT EXCEEDING 200 BAR DIAMETERS OR 10 FEET.
16. REINFORCE AND GROUT VERTICAL CELLS AT CORNERS, ENDS OF WALLS, JAMBS OF OPENINGS, EACH SIDE OF VERTICAL CONTROL JOINTS, AND AT SPACING SHOWN ON DRAWINGS.
17. VENEER ANCHORS:
    - A. ANCHORS SHALL MEET THE DIMENSIONAL REQUIREMENTS OF ACI 530/ASCE 5/TMS 402.
    - B. COMPRESSION TEST DATA SHALL BE SUBMITTED FOR PROPOSED ANCHORS WHERE CAVITY WIDTH EXCEEDS 4.5".
    - C. ANCHOR TENSION CAPACITY SHALL CONSIDER THE BACKUP MATERIAL AND THICKNESS, AND BE COORDINATED WITH THE TRADE PROVIDING VENEER BACKUP.
    - D. ANCHORS SHALL BE COMPATIBLE WITH BACKUP STRUCTURE MATERIAL AND ARCHITECTURAL INSULATION, VAPOR BARRIER AND WATERPROOFING SYSTEMS.
    - E. PROVIDE ANCHORS AT 16" MAXIMUM IN ONE DIRECTION AND 24" IN THE ORTHOGONAL DIRECTION WHERE qz IS LESS THAN 40 PSF.
    - F. PROVIDE ANCHORS AT 16" MAXIMUM IN EACH DIRECTION WHERE qz EXCEEDS 40 PSF.
    - G. PROVIDE ANCHORS AROUND PERIMETER OF OPENINGS AT 24" MAXIMUM AND WITHIN 12" OF THE OPENING.
    - H. IN SEISMIC DESIGN CATEGORY C AND ABOVE PROVIDE TIES WITH A CONTINUOUS ANCHOR WIRE IN VENEER JOINTS.
18. WHERE NOTED ON THE DRAWINGS, PROVIDE CLEARANCE BETWEEN MASONRY AND STRUCTURAL ELEMENTS, OR WRAP STEEL WITH POLYETHYLENE FILM.
19. LOCATE VERTICAL CONTROL JOINTS IN ALL MASONRY WALLS AS SHOWN ON THE ARCHITECTURAL DRAWINGS, STRUCTURAL DRAWINGS, OR SPACED HORIZONTALLY AT 25'-0 MAXIMUM SPACING WHERE NOT SHOWN.

STRUCTURAL STEEL:

1. STRUCTURAL STEEL SHALL BE DETAILED, FABRICATED, AND ERECTED IN ACCORDANCE WITH THE "SPECIFICATION FOR STRUCTURAL STEEL BUILDINGS" (AISC 360) AND THE "CODE OF STANDARD PRACTICE FOR STEEL BUILDINGS AND BRIDGES" (AISC 303) BY THE AMERICAN INSTITUTE OF STEEL CONSTRUCTION (AISC).
2. STRUCTURAL STEEL WIDE FLANGE BEAMS AND WTS SHALL CONFORM TO ASTM A992, 50 KSI YIELD.
3. ROLLED STEEL FLOOR PLATES SHALL CONFORM TO ASTM A786, COMMERCIAL GRADE.
4. OTHER ROLLED SHAPES, INCLUDING PLATES, CHANNELS, AND ANGLES SHALL CONFORM TO ASTM A36, 36 KSI YIELD.
5. HOLLOW STRUCTURAL SECTION (HSS) RECTANGULAR SHAPES SHALL CONFORM TO ASTM A500, GRADE C, 50 KSI YIELD.
6. HSS ROUND SHAPES SHALL CONFORM TO ASTM A500, GRADE C, 46 KSI YIELD.
7. PIPE SHAPES SHALL CONFORM TO ASTM A53, GRADE B, 35 KSI YIELD.
8. EXCEPT AS NOTED, FRAMED BEAM CONNECTIONS SHALL BE BEARING-TYPE WITH 3/4" DIAMETER, SNUG TIGHT, ASTM F3125 BOLTS; DETAILED IN CONFORMANCE WITH THE STRUCTURAL DRAWINGS AND THE "STEEL CONSTRUCTION MANUAL" BY THE AISC. INSTALL BOLTS IN ACCORDANCE WITH AISC'S "SPECIFICATION FOR STRUCTURAL JOINTS USING HIGH-STRENGTH BOLTS".
9. ALL BEAMS SHALL HAVE FULL DEPTH WEB STIFFENERS EACH SIDE OF WEBS ABOVE AND BELOW COLUMNS.
10. ANCHOR RODS SHALL CONFORM TO ASTM F1554, GRADE (36, 55 WITH WELDABILITY SUPPLEMENT S1, AND/OR 105) AS NOTED ON THE STRUCTURAL DRAWINGS.
11. HEADED ANCHOR STUDS (HAS) SHALL CONFORM TO ASTM A108 AND SHALL BE CONNECTED TO STRUCTURAL STEEL WITH EQUIPMENT APPROVED BY THE STUD MANUFACTURER ACCORDING TO THE STUD MANUFACTURER'S RECOMMENDATIONS.
12. WELDING SHALL BE DONE BY A CERTIFIED WELDER IN ACCORDANCE WITH THE AISC DOCUMENTS LISTED ABOVE, THE AMERICAN WELDING SOCIETY (AWS) D1.1: STRUCTURAL WELDING CODE, AND THE RECOMMENDATIONS FOR USE OF WELD E70 ELECTRODES. WHERE NOT SPECIFICALLY NOTED, MINIMUM WELD SHALL BE 3/16" FILLET BY LENGTH OF CONTACT EDGE.
13. GROUT BENEATH COLUMN BASE AND BEAM BEARING PLATES SHALL HAVE A MINIMUM 28-DAY, COMPRESSIVE STRENGTH OF 7,500 PSI AND SHALL BE NON-SHRINK, NON-METALLIC, AND TESTED IN ACCORDANCE WITH ASTM C1107.

COLD-FORMED STEEL FRAMING (DELEGATED DESIGN):

1. COLD FORMED DESIGN FOR THIS PROJECT IS A PERFORMANCE BASED, DELEGATED DESIGN. THE CONTRACTOR SHALL SUBMIT SHOP DRAWINGS AND CALCULATIONS FOR REVIEW. CALCULATIONS SHALL BE PERFORMED BY A STRUCTURAL ENGINEER WITH CURRENT REGISTRATION IN THE STATE OF COLORADO.
2. STUD SIZES AND DETAIL OPTIONS PROVIDED ARE REPRESENTATIVE OF THIS TYPE OF CONSTRUCTION. THE CONTRACTOR SHALL COORDINATE WITH POTENTIAL COLD-FORMED SUB-CONTRACTORS AND THEIR ENGINEERS FOR SPECIFIC BIDDING INFORMATION.
3. MEMBER FORMING SHALL CONFORM TO THE AISI NORTH AMERICAN SPECIFICATION FOR THE DESIGN OF COLD-FORMED STEEL STRUCTURAL MEMBERS.
4. ALL STRUCTURAL FRAMING (STUDS, JOISTS, TRACK, RUNNERS, BRACING, AND BRIDGING) SHALL BE GALVANIZED G-60 SHEET STEEL CONFORMING TO ASTM A1003.
5. STUDS AND JOISTS 54 MILS (16 GAUGE) AND HEAVIER SHALL BE 50 KSI YIELD. 43 MILS (18 GAUGE) AND LIGHTER SHALL BE 33 KSI YIELD UNLESS NOTED.
6. COLD-FORMED DESIGNER SHALL PROVIDE BRIDGING AND BLOCKING AT A MAXIMUM OF 4 FOOT SPACING AND WITHIN 12 INCHES OF DEFLECTION TRACK, OR AS REQUIRED FOR STABILITY AND STIFFNESS OF THE FINAL ASSEMBLY. *NOTE THAT EXTERIOR WALL SYSTEM DOES NOT HAVE SHEATHING ON THE OUTSIDE FACE TO PROVIDE STUD BRACING.*
7. WHERE PUNCHOUTS ARE WITHIN 8" OF MEMBER ENDS, INSTALL UNPUNCHED STIFFENERS WITH (4) #10 SCREWS EACH EDGE TO THE STIFFENED MEMBER.
8. PARALLEL MEMBERS IN CONTACT SHALL HAVE #10 SCREWS @ 16" MAX ALONG EACH CONTACT EDGE IN THE FIELD OF THE MEMBER.
9. MINIMUM MEMBER THICKNESSES (GOVERNS OVER OTHER CRITERIA OR SCHEDULED/DETAILED SIZES):
   - A. STUD BACKUP TO MASONRY VENEER - 43 MILS
   - B. STUDS BEING WELDED - 54 MILS
   - C. STUDS SUPPORTING WELDED BRICK LEDGE - 68 MILS
10. DEFLECTION CRITERIA:
    - A. STUD BACKUP FOR WALL FINISHES, OUT-OF-PLANE DEFLECTION (WIND PRESSURE MAY BE 0.7 TIMES COMPONENT AND CLADDING PRESSURE AS PERMITTED BY IBC):
      - a. MASONRY VENEER: L/600
      - b. STUCCO: L/480
      - c. METAL PANEL AND ALL OTHERS NOT NOTED: L/360
    - B. FLOOR AND ROOF JOISTS: VERTICAL DEFLECTION OF L/360 LIVE LOAD AND L/240 TOTAL LOAD.
    - C. MEMBERS SUPPORTING MASONRY: VERTICAL DEFLECTION OF L/600 TOTAL LOAD.
11. COLD-FORMED STEEL FRAMING STUDS AND FRAMING ATTACHMENT TO BE DESIGNED FOR THE TRIBUTARY WIND AND GRAVITY LOAD OF THE STUD SPACING. CLADDING SUPPLIER TO DESIGN CLADDING TO ATTACH AT EACH STUD. CLADDING ATTACHMENT SPACING WHICH EXCEEDS THE STUD SPACING IS NOT ACCEPTABLE WITHOUT APPROVAL FROM THE METAL STUD SUPPLIER/DESIGNER AND THE PROJECT EOR. IF THE CLADDING SUPPLIER DOES NOT ATTACH TO EACH STUD, THE LOADS FROM THE CLADDING SUPPLIER MUST BE PROVIDED TO THE METAL STUD FRAMING SUPPLIER. THE METAL STUD FRAMING SUPPLIER WILL NEED TO INCORPORATE THESE LOADS INTO THE METAL STUD FRAMING DESIGN. GC TO COORDINATE BETWEEN METAL STUD FRAMING SUPPLIER AND CLADDING SUPPLIER AS REQUIRED.
12. THE SSMA PRODUCT IDENTIFICATION CODES ARE USED TO LABEL MEMBERS ON THE DRAWINGS: [MEMBER DEPTH IN 1/100 INCHES][STYLE][FLANGE WIDTH IN 1/100 INCHES] [MATERIAL THICKNESS IN MILS] [YIELD STRENGTH KSI]

CORROSION CONTROL:

1. ALL STEEL MEMBERS EXPOSED TO WEATHER SHALL BE HOT DIPPED GALVANIZED PER ASTM A123.
2. FASTENERS AND HARDWARE SHALL BE HOT DIPPED GALVANIZED PER ASTM A153 OR ASTM B695 CLASS 50 (A490 BOLTS SHALL NOT BE HOT DIPPED GALVANIZED). STAINLESS STEEL FASTENERS AND HARDWARE MAY ALSO BE USED.
3. ALL FIELD CUT OR DAMAGED SURFACES, FIELD WELDED AREAS AND AUTHORIZED NON-GALVANIZED MEMBERS AS INDICATED ON THE STRUCTURAL DRAWINGS SHALL BE REPAIRED WITH (2) COATS OF A 95% ZINC RICH PAINT PER ASTM A780 (ZRC PREFERRED).

STRUCTURAL WOOD FRAMING:

1. IN-GRADE BASE VALUES HAVE BEEN USED FOR DESIGN.
2. DIMENSIONAL LUMBER FRAMING SHALL BE S4S HEM FIR NO. 2 AND BETTER UNO.
3. SOLID TIMBER BEAMS AND POSTS SHALL BE DOUGLAS FIR-LARCH NO. 1 AND BETTER UNO.
4. STUDS SHALL BE HEM FIR STUD GRADE AND BETTER UNO.
5. TOP AND BOTTOM PLATES SHALL BE DOUGLAS FIR-LARCH NO. 2 AND BETTER UNO.
6. ALL LUMBER SHALL BE 19% MAXIMUM MOISTURE CONTENT AT THE TIME OF INSTALLATION UNO.
7. ALL WOOD EXPOSED TO WEATHER OR IN CONTACT WITH CONCRETE OR MASONRY SHALL BE PRESSURE TREATED DOUGLAS FIR-LARCH OR SOUTHERN YELLOW PINE. PRESERVATIVE-TREATED WOOD SHALL BE TREATED IN ACCORDANCE WITH AWPA STANDARDS U1 AND M4. TREATMENTS SHALL HAVE NO AMMONIA ADDED AND SHALL BE THE FOLLOWING USE CATEGORY:
   - A. UC2 AT INTERIOR
   - B. UC3B AT EXTERIOR WITH NO GROUND CONTACT
   - C. UC4B AT EXTERIOR WITH GROUND CONTACT
8. FASTENERS FOR USE WITH TREATED WOOD SHALL BE CORROSION RESISTANT IN ACCORDANCE WITH SECTION 2304.9.5 (2304.10.5 IN 2015 IBC) OF THE IBC.
9. ALL CONNECTORS USED WITH PRESSURE-TREATED MATERIAL SHALL BE STAINLESS STEEL ASTM 304 OR 316, OR HAVE A SIMPSON Z-MAX (G185) OR HDG COATING. STANDARD COATING (G90) IS ACCEPTABLE AT INTERIOR CONDITIONS WITH NON PRESSURE-TREATED LUMBER ONLY. CONNECTORS ARE TO BE IN ACCORDANCE WITH ASTM A653 OR ASTM 123.
10. ALL IRON AND STEEL PRODUCTS ATTACHED TO TREATED LUMBER SHALL BE HOT-DIPPED GALVANIZED IN ACCORDANCE WITH ASTM A123 OR SHALL BE TYPE 304 OR 316 STAINLESS STEEL.
11. STRUCTURAL MEMBERS SHALL NOT BE CUT FOR PIPES, ETC. UNLESS SPECIFICALLY NOTED OR DETAILED ON THE STRUCTURAL DRAWINGS.
12. ALL BOLTS SHALL BE RETIGHTENED PRIOR TO CLOSING IN OF WALLS, FLOORS, AND ROOFS.
13. ALL BOLTS BEARING ON WOOD SHALL HAVE STANDARD CUT WASHERS UNDER HEAD AND/OR NUT, UNO.
14. METAL FRAMING ANCHORS SHOWN OR REQUIRED, SHALL BE SIMPSON STRONG-TIE OR EQUAL CODE APPROVED CONNECTORS AND INSTALLED WITH ALL HOLES FILLED (ROUND AND TRIANGULAR) WITH THE MAXIMUM SIZE NAIL RECOMMENDED BY THE MANUFACTURER TO DEVELOP THE MAXIMUM RATED CAPACITY.
15. CONNECTOR BOLTS AND LAG SCREWS SHALL CONFORM TO ANSI/ASME B18.2.1 AND ASTM SAE J429 GRADE 1.
16. NAILS AND SPIKES SHALL CONFORM TO ASTM F1667.
17. WOOD SCREWS SHALL CONFORM TO ANSI/ASME B18.6.1.
18. LEAD HOLES FOR LAG SCREWS SHALL BE 40%-70% OF THE SHANK DIAMETER AT THE THREADED SECTION AND EQUAL TO THE SHANK DIAMETER AT THE UNTHREADED SECTION.
19. CONVENTIONAL LIGHT FRAMING SHALL COMPLY WITH IBC SECTION 2308.
20. COLUMNS / MULTIPLE STUDS IN BEARING WALLS SUPPORTING ALL BEAMS AND HEADERS SHALL OCCUR CONTINUOUSLY THROUGH EACH FLOOR LEVEL DOWN TO THE FOUNDATION OR ANOTHER SUPPORT BEAM. SOLID SQUASH BLOCKING EQUIVALENT IN AREA TO THE COLUMN/MULTIPLE STUDS ABOVE SHALL BE PROVIDED WITHIN THE JOIST SPACE BENEATH THE COLUMN/MULTIPLE STUDS.
21. ALL BEAMS AND TRUSSES SHALL BE BRACED AGAINST ROTATION AT POINTS OF BEARING.
22. 2X BLOCKING SHALL BE PLACED BETWEEN JOISTS OR RAFTERS AT ALL SUPPORTS, UNO.
23. CROSS-BRIDGING OR SOLID BLOCKING SHALL BE PROVIDED AT 8'-0" MAX. FOR ALL JOISTS AND RAFTERS MORE THAN 10" IN DEPTH, 2X3 OR APPROVED METAL TYPE BRIDGING MAY BE USED.
24. PROVIDE A MINIMUM OF (3) STUDS AT EACH CORNER, UNO.
25. ALL JOISTS AND BEAMS (EXCLUDING I-JOISTS) SHALL BE SEAT-CUT FOR FULL UNIFORM BEARING AT SUPPORTS, SEATS, CAPS, ETC.
26. EXCEPT AS NOTED OTHERWISE, MINIMUM NAILING SHALL BE PROVIDED AS SPECIFIED IN TABLE 2304.9.1 "FASTENING SCHEDULE" (2304.10.1 IN 2015 IBC) OF THE IBC.
27. ALL MULTIPLE MEMBER BEAMS SHALL BE NAILED TOGETHER WITH MAX NUMBER OF 10D NAILS VERTICALLY @ 3" AND HORIZONTALLY @ 12" PER PLY.
28. ALL ROOF RAFTERS, JOISTS, TRUSSES, AND BEAMS SHALL BE ANCHORED TO SUPPORTS WITH H2.5A METAL FRAMING ANCHORS UNO. PROVIDE (2) WITHIN 4'-0" OF ALL CORNERS.

SHOP DRAWINGS:

1. THE STRUCTURAL DRAWINGS ARE COPYRIGHTED AND SHALL NOT BE COPIED FOR USE AS ERECTION PLANS OR SHOP DETAILS. USE OF JVA'S ELECTRONIC FILES AS THE BASIS FOR SHOP DRAWINGS REQUIRES PRIOR APPROVAL BY JVA. A SIGNED RELEASE OF LIABILITY BY THE GENERAL CONTRACTOR AND/OR HIS SUBCONTRACTORS, AND DELETION OF JVA'S NAME AND LOGO FROM ALL SHEETS SO USED.
2. THE GENERAL CONTRACTOR SHALL SUBMIT IN WRITING ANY REQUESTS TO MODIFY THE STRUCTURAL DRAWINGS OR PROJECT SPECIFICATIONS.
3. ALL SHOP AND ERECTION DRAWINGS SHALL BE CHECKED AND STAMPED (AFTER HAVING BEEN CHECKED) BY THE GENERAL CONTRACTOR PRIOR TO SUBMISSION FOR STRUCTURAL ENGINEER'S REVIEW; SHOP DRAWING SUBMITTALS NOT CHECKED BY THE GENERAL CONTRACTOR PRIOR TO SUBMISSION TO THE STRUCTURAL ENGINEER WILL BE RETURNED WITHOUT REVIEW.
4. FURNISH ELECTRONIC VERSION (PDF) OF SHOP AND ERECTION DRAWINGS TO THE STRUCTURAL ENGINEER FOR REVIEW PRIOR TO FABRICATION FOR:
   - A. CONCRETE MIX DESIGNS
   - B. CONCRETE REINFORCING STEEL
   - C. CONCRETE SLAB ON GRADE CONTROL JOINT LAYOUT
   - D. MASONRY REINFORCING STEEL
   - E. COLD-FORMED STEEL FRAMING
5. SUBMIT IN A TIMELY MANNER TO PERMIT 10 WORKING DAYS FOR REVIEW BY THE STRUCTURAL ENGINEER.
6. SHOP DRAWINGS SUBMITTED FOR REVIEW DO NOT CONSTITUTE "REQUEST FOR CHANGE IN WRITING" UNLESS SPECIFIC SUGGESTED CHANGES ARE CLEARLY MARKED. IN ANY EVENT, CHANGES MADE BY MEANS OF THE SHOP DRAWING SUBMITTAL PROCESS BECOME THE RESPONSIBILITY OF THE ONE INITIATING THE CHANGE.

FIELD VERIFICATION OF EXISTING CONDITIONS:

1. THE GENERAL CONTRACTOR SHALL THOROUGHLY INSPECT AND SURVEY THE EXISTING STRUCTURE TO VERIFY CONDITIONS THAT AFFECT THE WORK SHOWN ON THE DRAWINGS.
2. THE GENERAL CONTRACTOR SHALL REPORT ANY VARIATIONS OR DISCREPANCIES TO THE ARCHITECT AND STRUCTURAL ENGINEER BEFORE PROCEEDING.

STRUCTURAL ERECTION AND BRACING REQUIREMENTS:

1. THE STRUCTURAL DRAWINGS ILLUSTRATE AND DESCRIBE THE COMPLETED STRUCTURE WITH ELEMENTS IN THEIR FINAL POSITIONS, PROPERLY SUPPORTED, CONNECTED, AND/OR BRACED.
2. THE STRUCTURAL DRAWINGS ILLUSTRATE TYPICAL AND REPRESENTATIVE DETAILS TO ASSIST THE GENERAL CONTRACTOR. DETAILS SHOWN APPLY AT ALL SIMILAR CONDITIONS UNLESS OTHERWISE INDICATED. ALTHOUGH DUE DILIGENCE HAS BEEN APPLIED TO MAKE THE DRAWINGS AS COMPLETE AS POSSIBLE, NOT EVERY DETAIL IS ILLUSTRATED AND NOT EVERY EXCEPTIONAL CONDITION IS ADDRESSED.
3. ALL PROPRIETARY CONNECTIONS AND ELEMENTS SHALL BE INSTALLED IN ACCORDANCE WITH THE MANUFACTURERS' RECOMMENDATIONS.
4. ALL WORK SHALL BE ACCOMPLISHED IN A WORKMANLIKE MANNER AND IN ACCORDANCE WITH THE APPLICABLE CODES AND LOCAL ORDINANCES.
5. THE GENERAL CONTRACTOR IS RESPONSIBLE FOR COORDINATION OF ALL WORK, INCLUDING LAY

CONCRETE SPECIAL INSPECTION (IBC 1705.3 & 1705.12.1)

ITEM	REQUIRED QUALIFICATIONS	FREQUENCY	DETAILED INSTRUCTIONS
Reinforcing steel	ACI-CCI ICC-RCSI	Periodic	Verify prior to placing concrete that reinforcing is of specified type, grade and size; that it is free of oil, dirt and rust; that it is located and spaced properly; that hooks, bends, ties, stirrups and supplemental reinforcement are placed correctly; that lap lengths, stagger and offsets are provided; and that all mechanical connections are installed per the manufacturer's instructions and/or evaluation report.
Welding of reinforcing steel	AWS-CWI	Periodic	Visually inspect all welds and also verify weldability of reinforcing steel based upon carbon equivalent and in accordance with AWS D1.4.
Cast-in bolts & embeds	ACI-CCI ICC-RCSI	Periodic	Inspection of anchors or embeds cast in concrete is required when allowable loads have been increased or where strength design is used.
Post-installed anchors or dowels	ACI-CCI ICC-RCSI	Periodic	All post-installed anchors/dowels shall be specially inspected as required by the approved ICC-ES report. Horizontally or upwardly inclined anchors that resist sustained tension loads require continuous inspection and approved installers.
Use of required mix design	ACI-CCI ICC-RCSI	Periodic	Verify that all mixes used comply with the approved construction documents; ACI 318: Ch. 19, 26.4.3, 26.4.4; and IBC 1904.1, 1904.2, 1908.2, 1908.3.
Concrete sampling for strength tests, slump, air content, and temperature	ACI-CFTT ACI-SIT	Continuous	
Concrete & shotcrete placement	ACI-CCI ICC-RCSI	Continuous	
Curing temperature and techniques	ACI-CCI ICC-RCSI	Periodic	Verify that the ambient temperature for concrete is kept at > 50°F for at least 7 days after placement. High-early-strength concrete shall be kept at > 50°F for at least 3 days. Accelerated curing methods may be used (see ACI 318: 26.4.7-26.4.9). The ambient temperature for shotcrete shall be > 40°F for the same period of time as noted for concrete. Shotcrete shall be kept continuously moist for at least 24 hours after shotcreting. All concrete materials, reinforcement, forms, fillers, and ground shall be free from frost. In hot weather conditions ensure that appropriate measures are taken to avoid plastic shrinkage cracking and that the specified water/cement ratio is not exceeded.
Strength verification	ACI-STT	Periodic	Verify that adequate strength has been achieved prior to the removal of shores and forms or the stressing of post-tensioned tendons.
Formwork		Periodic	Verify that the forms are placed plumb and conform to the shapes, lines, and dimensions of the members as required by the approved construction documents.

SOIL SPECIAL INSPECTION (IBC 1705)

ITEM	REQUIRED QUALIFICATIONS	FREQUENCY	DETAILED INSTRUCTIONS
SHALLOW FOUNDATIONS			(IBC 1705.6)
Verify subgrade	PE/GE	Periodic	Prior to placement of concrete inspect soils below footings for adequate bearing capacity and consistency with geotechnical report.
CONTROLLED STRUCTURAL FILL			(IBC 1705.6)
Excavations	PE/GE	Periodic	Verify excavations extend to proper depth and material prior to placement of compacted fill or concrete.
Fill materials	PE/GE	Periodic	Perform classification and testing of compacted fill materials. Check for proper classifications and gradations at each lift and not less than once for each 10,000ft² of surface area.
Placement and compaction		Continuous	Verify proper materials, densities and lift thicknesses during placement and compaction.
Subgrade preparation	PE/GE	Periodic	Verify that subgrade has been appropriately prepared prior to placing compacted fill.
Density		Continuous	Test density of each lift by nuclear methods (ASTM D2922).

WOOD SPECIAL INSPECTION (IBC 1705.5)

ITEM	REQUIRED QUALIFICATIONS	FREQUENCY	DETAILED INSTRUCTIONS
Fabricator Certification/Quality Control Procedures		Periodic	Inspect shop fabrication process and quality control procedures of wood structural elements and assemblies in accordance with Section 1704.2.5.
Material Grading		Periodic	Verify grade or certificate of inspection of sawn lumber.
Connections		Periodic	Inspection of wood / wood connection of elements.
Lateral Connections		Continuous	Inspection of lateral connections (e.g. hold downs and straps).
Framing Details		Continuous	Verify that framing details comply with construction documents or approved submittals.
Roof and Floor Diaphragm Systems			(IBC 1705.12.1 & 1705.13.2)
Member Size and Connection		Periodic	Verify thickness and grade of sheathing, size of framing members at panel edges, nail/staple diameters and length, and the number of fastener lines and fastener spacing per approved plans.
Field Gluing		Continuous	Inspection during field gluing of elements of the main wind force resisting system.
Field Fastening		Periodic	Inspection during field nailing, bolting, anchoring and other fastening of wood diaphragms where sheathing fastener spacing is 4" or less.
Collectors, Drag Struts and Boundary Elements		Periodic	Inspection of collectors, drag struts and boundary elements.
Vertical Wind-Force-Resisting Systems, including Walls			(IBC 1705.12.1 & 1705.13.2)
Member Size and Connection		Periodic	Verify thickness and grade of sheathing, size of framing members at panel edges, nail/staple diameters and length, and the number of fastener lines and fastener spacing per approved plans.
Field Fastening		Periodic	Inspection during field nailing, bolting, anchoring and other fastening of wood shear walls where sheathing fastener spacing is 4" or less.
Hold-downs		Periodic	Inspection of nailing, bolting, anchoring and other fastening of hold-downs.

FIELD VERIFICATION:

- ALL DIMENSIONS AND CONDITIONS SHALL BE FIELD VERIFIED BY CONTRACTOR
- IF DIMENSIONS AND CONDITIONS DIFFER THAN THOSE SHOWN ON DRAWINGS, NOTIFY ARCHITECT AND ENGINEER
- NOTIFY ARCHITECT AND ENGINEER ONCE FINISHES ARE REMOVED & FOUNDATION IS EXCAVATED TO ALLOW OBSERVATION

ABBREVIATIONS KEY

@	ON CENTER SPACING	DWG	DRAWING	LGS	LIGHT GAGE STEEL		
(E)	EXISTING	DWL	DOWEL	LL	LIVE LOAD	REINF	REINFORCE, -ED, -ING
(N)	NEW	EA	EACH	LLH	LONG LEG HORIZONTAL	REQ	REQUIRED
(R)	REMOVE	ECC	ECCENTRIC	LLV	LONG LEG VERTICAL	REQMT	REQUIREMENT
AB	ANCHOR ROD (BOLT)	E-E	END TO END	LOC	LOCATION	RET	RETAINING
ADDL	ADDITIONAL	EF	EACH FACE	LP	LOW POINT	RM	ROOM
ADJ	ADJUSTABLE	EJ	EXPANSION JOINT	LSL	LAMINATED STRAND LUMBER (GENERIC TERM)	RMO	ROUGH MASONRY OPENING
AESS	ARCHITECTURALLY EXPOSED STRUCTURAL STEEL	EL	ELEVATION	LT	LIGHT	RO	ROUGH OPENING
AFF	ABOVE FINISHED FLOOR	ELEC	ELECTRIC, ELECTRICAL	LVL	LAMINATED VENEER LUMBER (GENERIC TERM)	SC	SLIP-CRITICAL
ALT	ALTERNATE	EMBED	EMBEDMENT	MACH	MACHINE	SCH	SCHEDULE
AMT	AMOUNT	ENGR EOR	ENGINEER ENGINEER OF RECORD	MASY	MASONRY	SDST	SELF-DRILLING/ SELF-TAPPING
ANCH	ANCHOR, ANCHORAGE	EQ	EQUAL	MATL	MATERIAL	SECT	SECTION
APPROX	APPROXIMATE	EQUIP	EQUIPMENT	MAX	MAXIMUM	SF	SQUARE FEET, SUB-FLOOR
ARCH	ARCHITECT, -URAL	EQUIV	EQUIVALENT	MB	MACHINE BOLT	SHT	SHEET
ATR	ALL THREAD ROD	ES	EACH SIDE	MECH	MECHANICAL	SHTG	SHEATHING
AVG	AVERAGE	EST	ESTIMATE	MEZZ	MEZZANINE	SIM	SIMILAR
BC	BOTTOM OF CONCRETE	E-W	EAST TO WEST	MFR	MANUFACTURE, -ER, -ED	SLH	SHORT LEG HORIZONTAL
BL	BRICK LEDGE	EXC	EXCAVATE	MIN	MINIMUM	SLV	SHORT LEG VERTICAL
BLK	BLOCK	EXP	EXPANSION	ML	MICROLLAM (TRUS-JOIST BRAND LVL), MASONRY LINTEL	SOG	SLAB ON GRADE
BLKG	BLOCKING	EXT	EXTERIOR	MO	MASONRY OPENING	SP	SPACES, SPACED
BM	BEAM	FD	FLOOR DRAIN	MTL	METAL	SPEC	SPECIFICATIONS
BOT	BOTTOM	FDN	FOUNDATION	NF	NEAR FACE	SQ	SQUARE
BRG	BEARING	FF	FINISHED FLOOR, FAR FACE	NIC	NOT IN CONTRACT	SSR	SHEAR STUD RAIL
BW	BOTTOM OF WALL	F-F	FACE TO FACE	NS	NEAR SIDE	ST	SNUG-TIGHT
CB	COUNTERBORE	FIG	FIGURE	N-S	NORTH TO SOUTH	STD	STANDARD
CF	CUBIC FOOT	FL	FLUSH	NTS	NOT TO SCALE	STIFF	STIFFENER
CFS	COLD-FORMED STEEL	FLG	FLANGE	OCJ	OSHA COLUMN JOIST	STL	STEEL
CG	CENTER OF GRAVITY	FLR	FLOOR	OD	OUTSIDE DIAMETER	STRUCT	STRUCTURE, -AL
CIP	CAST-IN-PLACE	FO	FACE OF	OF	OUTSIDE FACE	SUPT	SUPPORT
CJ	CONSTRUCTION JOINT, CONTROL JOINT	FP	FULL PENETRATION	OH	OPPOSITE HAND	SY	SQUARE YARD
CJP	COMPLETE JOINT PENETRATION	FS	FOOTING STEP, FAR SIDE	OPNG	OPENING	SYM	SYMMETRICAL
CL	CENTER LINE	FTG	FOOTING	OPP	OPPOSITE	T&B	TOP AND BOTTOM
CLG	CEILING	GA	GAGE, GAUGE	OSB	ORIENTED STRAND BOARD	T&G	TONGUE AND GROOVE
CLR	CLEAR	GALV	GALVANIZED	PAF	POWDER ACTUATED FASTENER	TB	TOP OF BEAM
CM	CONSTRUCTION MANAGER, -MENT	GC	GENERAL CONTRACTOR	PC	PRECAST	TC	TOP OF CONCRETE
CMU	CONCRETE MASONRY UNIT	GEN	GENERAL	PCF	POUNDS PER CUBIC FOOT	TCA	TORQUE-CONTROLLED ANCHOR
COL	COLUMN	GL	GLUED LAMINATED, GLULAM	PE	PRE-ENGINEERED	TD	TOP OF DECK
COM	COMMON	GND	GROUND	PEN	PENETRATION	THD	THREAD
COMB	COMBINATION	GR	GRADE	PERP	PERPENDICULAR	THK	THICK, -NESS
CONC	CONCRETE	GT	GIRDER TRUSS	PJP	PARTIAL JOINT PENETRATION	TJ	TOP OF JOIST
CONN	CONNECTION	GYP BD	GYPSUM BOARD	PL	PLATE	TL	TOTAL LOAD
CONT	CONTINUOUS, CONTINUE	HAS	HEADED ANCHOR STUD	PLF	POUND PER LINEAR FOOT	TPG	TOPPING
COORD	COORDINATE, COORDINATION	HDG	HOT-DIP GALVANIZED	PNL	PANEL	TRANS	TRANSVERSE
CS	COUNTERSINK	HDR	HEADER	PP	PANEL POINT	TW	TOP OF WALL
CTR	CENTER	HORIZ	HORIZONTAL	PS	PRESTRESSED	TYP	TYPICAL
CY	CUBIC YARD	HP	HIGH POINT	PSF	POUNDS PER SQUARE FOOT	ULT	ULTIMATE
DAB	DEFORMED ANCHOR BAR	HT	HEIGHT	PSI	POUNDS PER SQUARE INCH	UNO	UNLESS NOTED OTHERWISE
DET	DETAIL	ID	INSIDE DIAMETER	PSL	PARALLEL STRAND LUMBER (GENERIC TERM)	VERT	VERTICAL
DEV	DEVELOP	IF	INSIDE FACE	PT	POST TENSIONED, PRESSURE TREATED	VIF	VERIFY IN FIELD
DIAG	DIAGONAL	INT	INTERIOR, INTERMEDIATE	PTN	PARTITION	WP	WORK POINT
DIM	DIMENSION	IT	INVERTED TEE	PWD	PLYWOOD	WT	WEIGHT
DL	DEAD LOAD	JB	JOIST BEARING	QTY	QUANTITY	WWF	WELDED WIRE FABRIC
DN	DOWN	JST	JOIST	R	RADIUS	XS	EXTRA STRONG
DP	DRILLED PIER	JT	JOINT	RE	REFERENCE, REFER TO	XSECT	CROSS SECTION
DT	DOUBLE TEE	K	KIP (1,000 LBS)	RECT	RECTANGLE	XXS	DOUBLE EXTRA STRONG

SYMBOLS KEY

	DIRECTION OF DECK SPAN
GRID	GRID DESIGNATION
X	REVISION
X SX	INDICATES STRUCTURAL ELEVATION
SWx	SHEAR WALL
	SHORING
	STEP IN FLOOR ELEVATION
	CMU (CONCRETE MASONRY UNIT)
	BRICK
	CIP CONCRETE
	PRECAST CONCRETE
	EXISTING CONCRETE
	EARTH
F.X.X	ISOLATED SPREAD FOOTING MARK
FXX	SPREAD FOOTING MARK
STEP	STEP IN BOTTOM OF WALL/GRADE BEAM
DP-XXM (Y) (XX'-X")	DRILLED PIER: XX = Ø, M = PIER MARK, (Y) = BEDROCK PENETRATION (XX'-X") = TOP OF PIER ELEVATION
XX:12	ROOF SLOPE
SLOPE	DIRECTION OF SLOPE (DOWN)
DN UP	STAIR OR RAMP DIRECTION
	STRESSING END ANCHOR
	DEAD END ANCHOR
	INTERMEDIATE ANCHOR

XXX'-X	TOP OF CONCRETE OR MASONRY ELEVATION
[XXX'-X]	TOP OF BEAM ELEVATION
JB XXX'-X	JOIST BEARING ELEVATION
BL XXX'-X	BRICK LEDGE ELEVATION
(XXX'-X)	TOP OF FOOTING ELEVATION
XXX'-X	TOP OF FLOOR ELEVATION

BUILDING COLUMN DESIGNATIONS

CONT C	COLUMN CONTINUOUS FROM LEVEL BELOW
CXX	COLUMN STARTING AT THIS LEVEL
B	COLUMN STOPPING BELOW THIS LEVEL, SEE FRAMING PLAN AT NEXT LOWER LEVEL
CXX STUB	COLUMN STARTING AND ENDING AT THIS LEVEL OF FRAMING
CXX HGR	COLUMN CONNECTING A LOWER BEAM TO A HIGHER BEAM AT THIS LEVEL OF FRAMING

BRACED/FRAME BAY SYMBOLS

B	INDICATES BRACED BAY MARK
X SX	INDICATES BRACED BAY ELEVATION
	INDICATES BRACED MEMBER (ON PLAN)
	INDICATES CONFIGURATION OF INVERTED CHEVRON-TYPE BRACED BAY WITH HSS DIAGONAL BRACES
	INDICATES CONFIGURATION OF SINGLE DIAGONAL BRACED BAY WITH HSS DIAGONAL BRACE
RF	INDICATES RIGID (MOMENT) FRAME WITH FULL PENETRATION WELDED BEAM FLANGE TO COLUMN CONNECTIONS
X SX	INDICATES RIGID (MOMENT) FRAME ELEVATION W/ FULL PENETRATION WELDED BEAM FLANGE TO COLUMN CONNECTIONS
	INDICATES BRACED BAY OR FRAMED BAY COLUMN BASE
	FULLY WELDED MOMENT FRAME CONNECTION
	CANTILEVER MOMENT CONNECTION
	LOCATION OF BEND IN BENT BEAM
<X>	NUMBER OF HEADED ANCHOR STUDS

XXX'-X	TOP OF CONCRETE OR MASONRY ELEVATION
	STEP TOP OF WALL
BL XXX'-X	BRICK LEDGE ELEVATION
(XXX'-X)	TOP OF FOOTING ELEVATION
XXX'-X	TOP OF FLOOR ELEVATION
	WOOD BEARING WALL
	WOOD SHEAR WALL

BUILDING COLUMN DESIGNATIONS

A	COLUMN ABOVE
B	COLUMN BELOW
Cxx	COLUMN OR OTHER ELEMENT BELOW SEE SCHEDULES & NOTES Cx = COLUMN BPx = BASE PLATE
CONT	COLUMN CONTINUOUS FROM LEVEL BELOW
XK YT	"X" NUMBER OF KING STUDS BELOW "Y" NUMBER OF TRIMMER STUDS BELOW
WPXY	"WP" = WOOD POST "X" = NUMBER OF STUDS "Y" = NOMINAL STUD DIMENSION
LVLXY	"LVL" = LAMINATED VENEER LUMBER "X" = NUMBER OF PLY'S "Y" = WIDTH OF LVL
HDx	HOLDOWN
	WOOD HEADER
	WOOD JOIST OR BEAM SUPPORTED BY METAL HANGER
	WOOD JOIST CONTINUOUS OVER INTERMEDIATE SUPPORT
	WOOD JOIST BEARING ON TOP OF SUPPORT

STATEMENT OF SPECIAL INSPECTIONS

This *Statement of Special Inspections* is submitted as a condition for permit issuance in accordance with the Special Inspection and Structural Testing requirements of the Building Code. It includes a schedule of Special Inspection services applicable to this project as well as the name of the Special Inspection Coordinator and the identity of other approved agencies to be retained for conducting these inspections and tests. This *Statement of Special Inspections* encompass the following disciplines:

The Special Inspection Coordinator shall keep records of all inspections and shall furnish inspection reports to the Building Official and the Registered Design Professional in Responsible Charge. Discovered discrepancies shall be brought to the immediate attention of the Contractor for correction. If such discrepancies are not corrected, the discrepancies shall be brought to the attention of the Building Official and the Registered Design Professional in Responsible Charge. The Special Inspection program does not relieve the Contractor of his or her responsibilities.

The inspectors and testing agencies shall be engaged by the Owner or the Owner's Agent, and not by the Contractor or Subcontractor whose work is to be inspected or tested. Any conflict of interest must be disclosed to the Building Official, prior to commencing work.

Interim reports shall be submitted to the Building Official and the Registered Design Professional in Responsible Charge.
Interim Report Frequency: Within 72 hours of inspection, unless indicated otherwise.

A *Final Report of Special Inspections* documenting completion of all required Special Inspections, testing and correction of any discrepancies noted in the inspections shall be submitted prior to issuance of a Certificate of Use and Occupancy.

Job site safety and means and methods of construction are solely the responsibility of the Contractor.

The qualifications of all personnel performing Special Inspection and testing activities are subject to the approval of the Building Official. The credentials of all Inspectors and testing technicians shall be provided if requested.

Key for Minimum Qualifications of Inspection Agents:

When the Registered Design Professional in Responsible Charge deems it appropriate that the individual performing a stipulated test or inspection have a specific certification or license as indicated below, such designation shall appear below the *Agency Number* on the Schedule.

PE/SE Structural Engineer – a licensed SE or PE specializing in the design of building structures
PE/GE Geotechnical Engineer – a licensed PE specializing in soil mechanics and foundations
EIT Engineer-In-Training – a graduate engineer who has passed the Fundamentals of Engineering examination

American Concrete Institute (ACI) Certification
ACI-CFTT Concrete Field Testing Technician – Grade 1
ACI-CCI Concrete Construction Inspector
ACI-LTT Laboratory Testing Technician – Grade 1 & 2
ACI-STT Strength Testing Technician

International Code Council (ICC) Certification
ICC-SMSI Structural Masonry Special Inspector
ICC-SWSI Structural Steel and Welding Special Inspector
ICC-SFSI Spray-Applied Fireproofing Special Inspector
ICC-PCSI Prestressed Concrete Special Inspector
ICC-RCSI Reinforced Concrete Special Inspector

National Institute for Certification in Engineering Technologies (NICET)
NICET-CT Concrete Technician – Levels I, II, III & IV
NICET-ST Soils Technician - Levels I, II, III & IV
NICET-GET Geotechnical Engineering Technician - Levels I, II, III & IV

Exterior Design Institute (EDI) Certification
EDI-EIFS EIFS Third Party Inspector

Statement of Responsibility
Each contractor responsible for the construction or fabrication of a system or component designated above must submit a Statement of Responsibility.

Statement of Responsibility
Each contractor responsible for the construction or fabrication of a system or component designated above must submit a Statement of Responsibility.

Prepared by: **Owner's Authorization:** **Building Official's Acceptance:**

Signature Date Signature Date Signature Date

CAIRN DESIGN LLC
leading high performance building solutions
1805 Sheely Drive
Fort Collins, CO 80526
voice: (970)-286-7968
cairndesignllc.com

COLORADO LICENSED 43130 PROFESSIONAL ENGINEER

JVA CONSULTING ENGINEERS
JVA, Inc. 213 Linden Street, Suite 200
Fort Collins, CO 80524 970.225.9099
www.jvajva.com
Boulder • Fort Collins • Winter Park
Glenwood Springs • Denver
JVA #21638

PROJECT:
LOGAN COUNTY COMMUNITY CENTER ADDITION

SHEET TITLE:
SPECIAL INSPECTIONS & ANNOTATIONS

ISSUE DATE:
BID/ PERMIT
12/16/2022

REVISIONS:

PROJECT NO.:
2208

SHEET NO.
S-001

As instruments of service, these drawings and the design represented are the permanent property of Cairn Design, LLC. Reproduction or use of these drawings other than for the project intended, without written consent from the Designer, is prohibited. Unauthorized use will be subject to legal action.

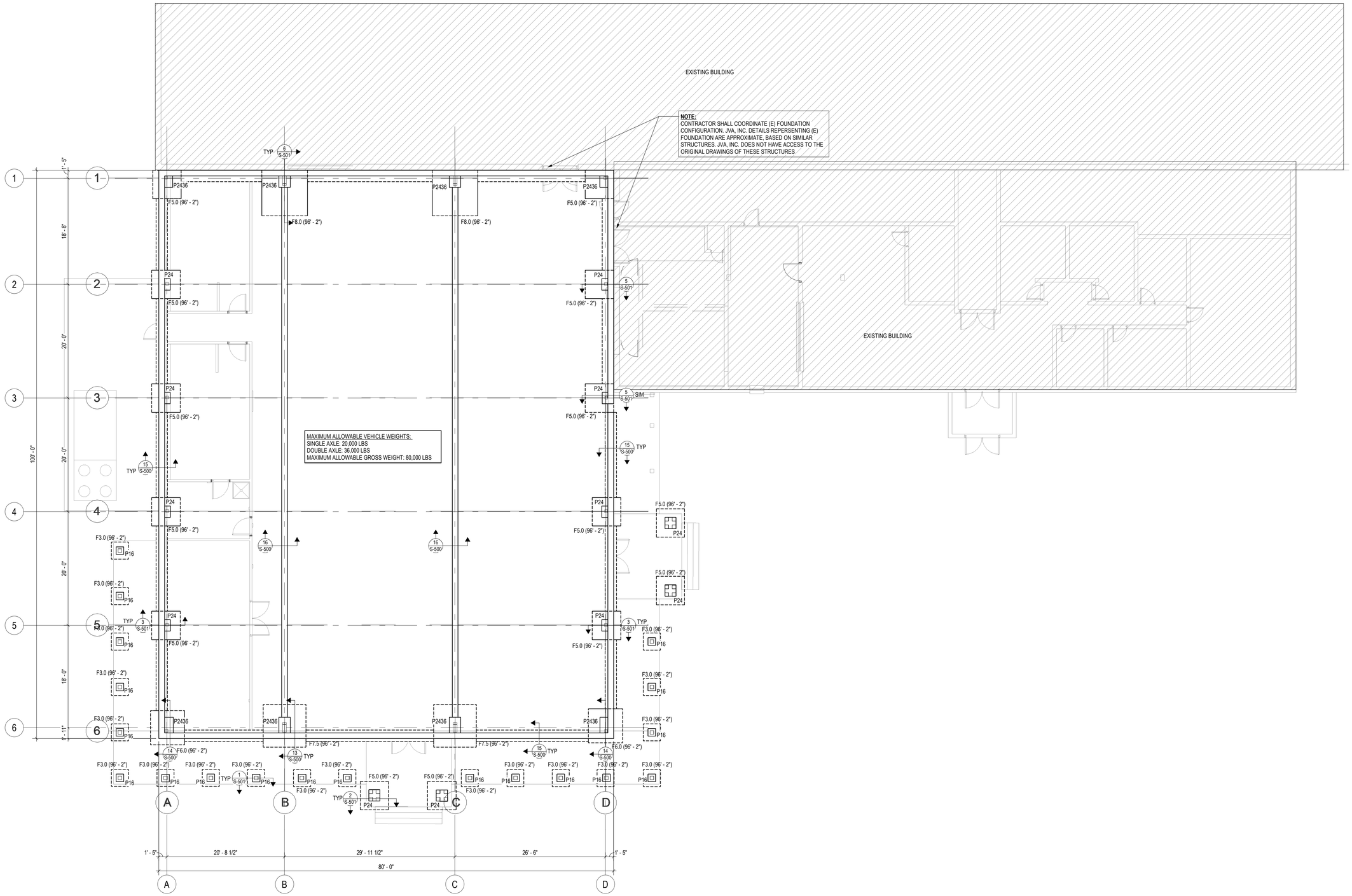

FOUNDATION PLAN

1/8" = 1'-0"

NORTH

0 2' 4' 8' 16'

FOUNDATION

- USGS ELEVATION 3930.86' = 100'-0, TOP OF MAIN LEVEL INTERIOR FLOOR SLAB
- TOP OF INTERIOR FLOOR SLAB ELEVATION = 100'-0 UNLESS NOTED THUS: XXX'-X
- TOP OF CONCRETE GRADE BEAM ELEVATION = 100'-0 AND 99'-2 AT DOOR OPENINGS UNLESS NOTED THUS: XXX'-X
- INTERIOR AND PERIMETER STEEL COLUMNS BEAR ON PIERS OR PILASTERS AT ELEVATION = 99'-2, TYPICAL UNLESS NOTED: XXX'-X
- TYPICAL (4) 3/4"Ø x 18" LONG ANCHOR RODS AT ALL BUILDING FRAME COLUMNS

METAL BUILDING NOTE:
FOUNDATION DIMENSIONS AND COLUMN LOCATIONS ARE PRELIMINARY AND HAVE NOT BEEN DESIGNED BY PRE-ENGINEERED METAL BUILDING (PEMB) MANUFACTURER. THE CONTRACTOR SHALL COORDINATE FOUNDATION PLAN WITH METAL BUILDING ANCHOR BOLT PLAN CONTACT STRUCTURAL ENGINEER IF METAL BUILDING PLANS CHANGE.
NOTE THAT FINAL PILASTER SIZE AND CONFIGURATION MAY BE REVISED FROM PRELIMINARY UPON FINAL PEMB COLUMN DESIGN LAYOUT.
ALL PRE-ENGINEERED METAL BUILDING FRAMING SHALL BE COORDINATED AND APPROVED BY THE OWNER, ENGINEER, AND ARCHITECT FOR FINAL DESIGN CRITERIA ALONG WITH PORTAL FRAME/BRACING LOCATIONS & LAYOUT TO ACHIEVE DESIGN INTENT.

SLAB ON GRADE IN OFFICE AREAS:
6" CONCRETE SLAB ON PREPARED SUBGRADE PER GEOTECHNICAL REPORT. COORDINATE VAPOR BARRIER REQUIREMENTS WITH ARCHITECH; REINFORCE SLAB W/ #4 @ 16" C/C EACH WAY AT SLAB MID-DEPTH. PROVIDE 1/8" x 1" TOOLED CONTROL JOINTS AT 12'-0 MAX EACH WAY PER 7/S-500 . ADD (1) #4 x 4'-0 DIAGONAL BARS AT MID-DEPTH OF SLAB AT ALL RE-ENTRANT CORNERS.

CAIRN DESIGN LLC
leading high performance building solutions
1805 Sheely Drive
Fort Collins, CO 80526
voice: (970)-286-7968
cairndesignllc.com

COLORADO LICENSED PROFESSIONAL ENGINEER

CONSULTING ENGINEERS
JVA, Inc. 213 Linden Street, Suite 200
Fort Collins, CO 80524 970.225.9099
www.jvajva.com
Boulder • Fort Collins • Winter Park
Glenwood Springs • Denver
JVA #21638

PROJECT:
LOGAN COUNTY COMMUNITY CENTER ADDITION

SHEET TITLE:
FOUNDATION PLAN

ISSUE DATE:
BID/ PERMIT
12/16/2022

REVISIONS:

PROJECT NO.:
2208

SHEET NO.
S-101

As instruments of service, these drawings and the design represented are the permanent property of Cairn Design, LLC. Reproduction or use of these drawings other than for the project intended, without written consent from the Designer, is prohibited. Unauthorized use will be subject to legal action.

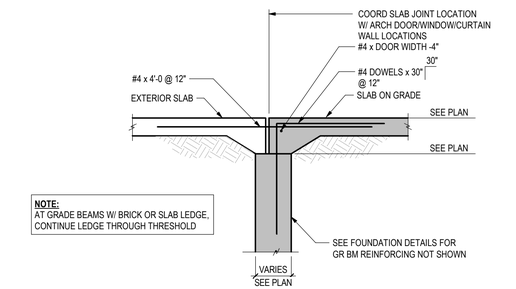

TYPICAL EXTERIOR DOOR THRESHOLD - SECTION

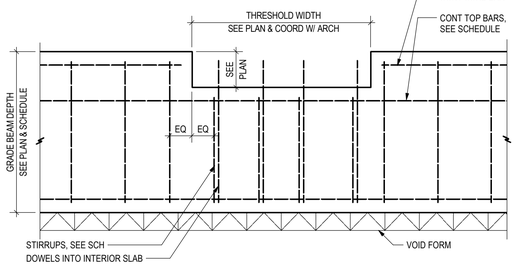

TYPICAL EXTERIOR DOOR THRESHOLD - ELEVATION

12 / S-500 TYP DOOR THRESHOLD
3/4" = 1'-0"

TYPICAL CONCRETE REINFORCING LAP & EMBEDMENT LENGTHS (UNO)							
BAR SIZE	TYPE	Fc = 3000 PSI (TOP)	Fc = 3000 PSI (OTHER)	Fc = 4000 PSI (TOP)	Fc = 4000 PSI (OTHER)	Fc = 5000 PSI (TOP)	Fc = 5000 PSI (OTHER)
#4	EMBED	29	22	25	19	22	17
	LAP	37	29	32	25	29	22
#5	EMBED	36	28	31	24	28	22
	LAP	47	36	40	31	36	28
#6	EMBED	43	33	37	29	33	26
	LAP	56	43	48	37	43	33
#7	EMBED	63	48	54	42	49	37
	LAP	81	63	70	54	63	49

NOTES:
1. TOP BARS ARE HORIZONTAL BARS WITH MORE THAN 12 INCHES OF FRESH CONCRETE CAST BELOW BAR
2. TABULATED VALUES ARE BASED ON GRADE 60 NON-EPOXY-COATED REINFORCING BARS AND NORMAL WEIGHT CONCRETE
3. VALUES ARE IN INCHES

6 / S-500 LAP SCHEDULE
3/4" = 1'-0"

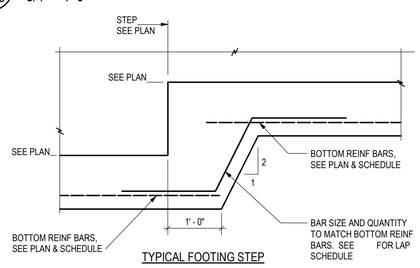

TYPICAL FOOTING STEP

2 / S-500 TYPICAL FOOTING STEP
3/4" = 1'-0"

ISOLATED FOOTING SCHEDULE					
MARK	WIDTH	LENGTH	THICKNESS	REINFORCING	COMMENTS
F3.0	3' - 0"	3' - 0"	1' - 0"	(4) #5 EA WAY	
F5.0	5' - 0"	5' - 0"	1' - 2"	(6) #5 EA WAY, TOP & BOTTOM	
F6.0	6' - 0"	6' - 0"	1' - 2"	(7) #5 EA WAY, TOP & BOTTOM	
F7.5	7' - 6"	7' - 6"	1' - 2"	(8) #5 EA WAY, TOP & BOTTOM	
F8.0	8' - 0"	8' - 0"	1' - 2"	(9) #5 EA WAY, TOP & BOTTOM	

CENTER FOOTINGS UNDER STEM WALLS, PILASTERS & COLUMNS, TYPICAL UNLESS NOTED OTHERWISE. SEE SECTIONS FOR ADDTIONAL REINFORCEMENT

1 / S-500 SCHEDULE
NO SCALE

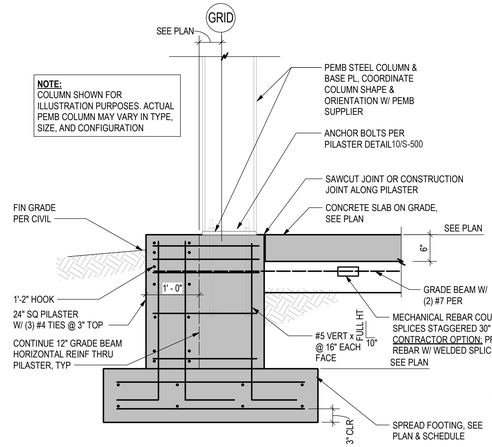

13 / S-500 TYP EXTERIOR PILASTER FOUNDATION AT TIE BEAM
3/4" = 1'-0"

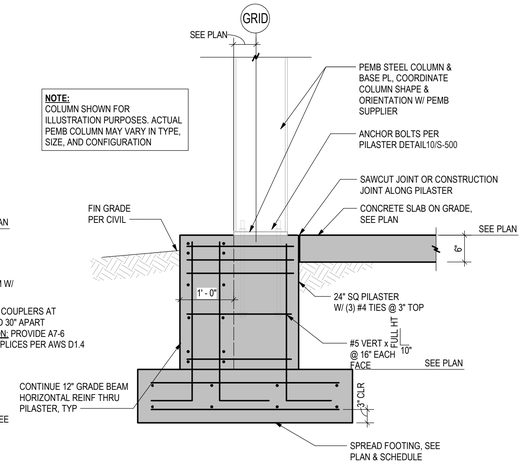

14 / S-500 TYP EXTERIOR PILASTER FOUNDATION
3/4" = 1'-0"

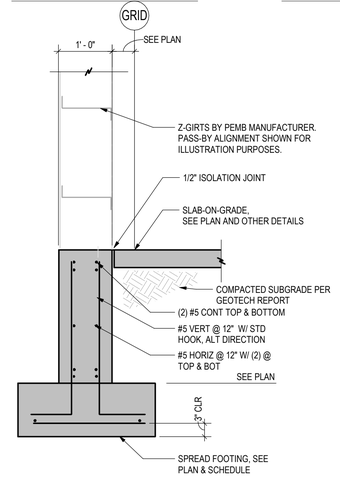

15 / S-500 TYP EXTERIOR STEM WALL
3/4" = 1'-0"

NOTE:
TYPICAL EDGE DETAILS 13/S-500 ,14/S-500 & 15/S-500 ASSUME PASS-BY GIRTS. IF IN-PLANE GIRTS ARE USED, DETAILS WILL BE ADJUSTED ACCORDINGLY

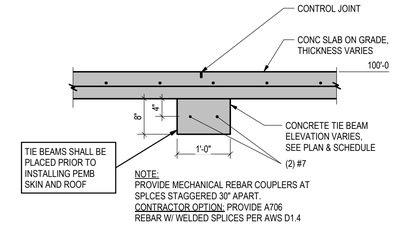

16 / S-500 TIE BEAM SECTION
3/4" = 1'-0"

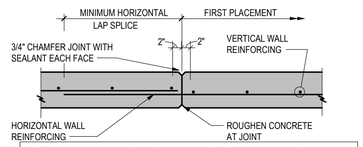

1. PROVIDE 3/4" FULL HEIGHT V GROOVE CONSTRUCTION JOINTS WHERE PLACING OF CONCRETE IS DISCONTINUED.

2. LOCATION AND DETAIL OF JOINTS SHALL BE APPROVED BY THE ARCHITECT AND STRUCTURAL ENGINEER PRIOR TO PLACING CONCRETE

TYPICAL VERTICAL CONSTRUCTION JOINT IN GRADE BEAM

8 / S-500 PLAN-VERT CONST JOINT
3/4" = 1'-0"

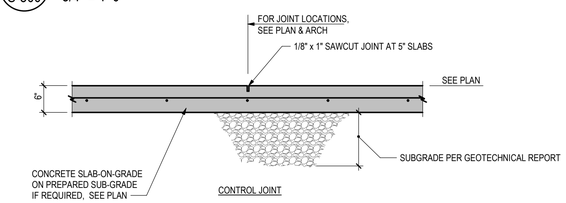

TYPICAL REINFORCED SLAB-ON-GRADE

7 / S-500 DETAIL
3/4" = 1'-0"

CONCRETE COLUMN SCHEDULE					
MARK	DEPTH	WIDTH	VERTICAL REINF	TIES	TIE TYPE
P16	16"	16"	(4) #6	#4 @ 12"	A
P24	24"	24"	(8) #6	#4 @ 12"	B
P2436	24"	36"	(10) #6	#4 @ 12"	C

NOTES:
- SEE PLANS AND DETAILS FOR TOP ELEVATIONS OF PIER CAPS, PILASTERS AND/OR FOOTINGS
- COLUMN VERICAL REINFORCEMENT, TIES, AND SPLICES SHALL BE DETAILED TO CONFORM TO "BUILDING CODE REQUIREMENTS FOR REINFORCED CONCRETE ACI 318" AND ACI 315 "DETAILS AND DETAILING OF CONCRETE REINFORCEMENT
- UNLESS SHOWN OTHERWISE IN THE COLUMN SCHEDULE, SQUARE AND RECTANGLE COLUMNS SHALL HAVE EQUAL NUMBER OF VERTICAL BARS ON EACH COLUMN FACE
- SQUARE AND RECTANGLE COLUMN LAP SPLICES SHALL BE NORMAL LAP SPLICES (UNLESS NOTED OTHERWISE IN THE COLUMN SCHEDULE) WITH BARS OFFSET BENT IN THE SHOP TOWARD THE INTERIOR OF THE COLUMN.
- THE SLOPE OF THE INCLINED PORTION OF AN OFFSET BAR WITH THE AXIS OF THE COLUMN SHALL NOT EXCEED 1 IN 6. PORTIONS OF THE BAR ABOVE AND BELOW AN OFFSET SHALL BE PARALLEL TO THE AXIS OF THE COLUMN. OFFSET BARS SHALL BE BENT BEFORE PLACEMENT IN THE FORMS. WHERE A COLUMN FACE IS OFFSET 3 INCHES OR MORE, LONGITUDINAL BARS SHALL NOT BE OFFSET BENT. SEPARATE DOWELS, LAP SPLICED WITH THE LONGITUDINAL BARS ADJACENT TO THE OFFSET COLUMN FACES, SHALL BE PROVIDED. SEE COLUMN SPLICE DETAILS
- THE FOLLOWING NOTATION IS USED IN THE COLUMN SCHEDULE AND ELSEWHERE ON THE DRAWINGS TO DENOTE REINFORCING STEEL EMBEDMENT LENGTHS AND SPLICE TYPE.
  - M - MECHANICAL SPLICE TO DEVELOP 125% OF YIELD CAPACITY
  - CS - COMPRESSION SPLICE, 30 BAR DIAMETERS
  - A - CLASS A TENSION LAP SPLICE
  - B - CLASS B TENSION LAP SPLICE
- CLOSED TIES MUST HAVE SEISMIC HOOKS EACH END. CROSSTIES MUST HAVE A SEISMIC HOOK ONE END WITH 90° HOOK AT THE OTHER END. CONSECUTIVE CROSSTIES ENGAGING THE SAME LONGITUDINAL BAR HAVE THEIR 90° HOOKS ON OPPOSITE SIDES OF THE COLUMN

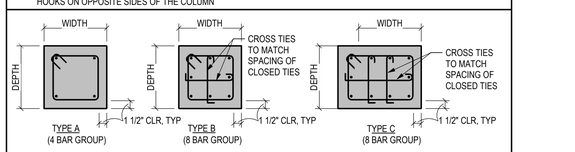

3 / S-500 GENERAL PILASTER DETAIL
3/4" = 1'-0"

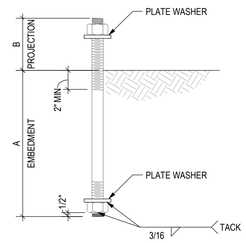

DIAMETER	A	B	PLATE SIZE
1/2"	0'-9"	REF NOTE 3	1/4" x 2"Ø
3/4"	1'-6"	REF NOTE 3	1/4" x 2"Ø
7/8"	1'-9"	REF NOTE 3	1/4" x 2"Ø
1"	2'-0"	REF NOTE 3	3/8" x 2 1/2"Ø
1 1/4"	2'-8"	REF NOTE 3	1/2" x 3"Ø

1. ALL ANCHOR BOLTS ARE TO BE SUPPLIED WITH 3 NUTS.
2. MINIMUM EMBEDMENT LENGTH OF ANCHOR MUST BE PLACED INTO A SINGLE POUR OF CONCRETE.
3. VERIFY BOLT PROJECTION WITH DELEGATED ENGINEER'S REQUIREMENTS.
4. PEMB SUPPLIER TO VERIFY ANCHOR DESIGN FOR ALL ACI CHAPTER 17 LIMIT STATES
5. PLATE WASHERS SHALL BE WELDED TO BASE PLATES. 3/16" FILLET WELD ALL AROUND TYPICAL

10 / S-500 ANCHOR BOLT DETAIL
1 1/2" = 1'-0"

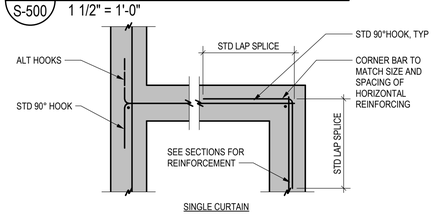

TYPICAL GRADE BEAM INTERSECTIONS

9 / S-500 TYP STEM WALL INTERSECTION
3/4" = 1'-0"

ADHESIVE ANCHOR IN 2500 PSI MIN & 21 DAY AGE MIN CONCRETE								
ADHESIVE TYPE	ANCHOR		PILOT HOLE	MIN EMBED UNO H	MIN EDGE DISTANCE E	MIN SPACING S	MIN CONC THICKNESS T
	THRD ROD	REBAR					
SIMPSON AT-XP (UES ER-263)	3/8"Ø	#3	1/2"Ø	16"	1 3/4"	3"	5"
	1/2"Ø	#4	5/8"Ø	16"	1 3/4"	3"	6 1/2"
	5/8"Ø	#5	3/4"Ø	16"	1 3/4"	3"	8 1/4"
	3/4"Ø	#6	7/8"Ø	16"	1 3/4"	3"	9 1/4"
	7/8"Ø	#7	1"Ø	16"	1 3/4"	3"	11 1/2"
	1"Ø	#8	1 1/8"Ø	16"	1 3/4"	3"	13"
HILTI HIT-HY 200 V3 (ICC-ESR 3187)	3/8"Ø	#3	1/2"Ø	16"	1 3/4"	1 7/8"	4 1/4"
	1/2"Ø	#4	5/8"Ø	16"	1 3/4"	2 1/2"	5 1/4"
	5/8"Ø	#5	3/4"Ø	16"	2"	3 1/8"	6 1/4"
	3/4"Ø	#6	7/8"Ø	16"	2 1/8"	3 3/4"	7 1/2"
	7/8"Ø	#7	1"Ø	16"	2 1/4"	4 3/8"	8 3/4"
	1"Ø	#8	1 1/8"Ø	16"	2 3/4"	5"	10"

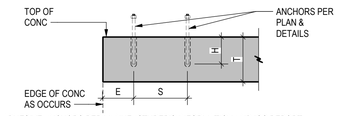

NOTES:
1. INSTALL ADHESIVE ANCHORS PER MANUFACTURER'S INFORMATION AND ICC REPORT.
2. CONTRACTOR TO VERIFY MINIMUM EDGE DISTANCES, SPACING AND THICKNESS ARE IN ACCORDANCE WITH SCHEDULE PRIOR TO INSTALLING ANCHOR.
3. HOLES TO BE DRILLED WITH ROTARY DRILL ONLY. WHEN DRILLING HOLES IN EXISTING CONCRETE, USE CARE AND CAUTION TO AVOID CUTTING OR DAMAGING THE EXISTING REINFORCING BARS. MAINTAIN A REASONABLE CLEARANCE BETWEEN REINFORCEMENT AND THE DRILLED-IN ANCHOR. FILL ABANDONED HOLES WITH HIGH STRENGTH GROUT.
4. SPECIAL INSPECTION IS REQUIRED PER IBC SECTION 1705 AND THE REQUIREMENTS OF THE ICC REPORTS. THE SPECIAL INSPECTOR MUST BE ON THE JOB SITE PERIODICALLY DURING ANCHOR INSTALLATION TO VERIFY ANCHOR TYPE, ANCHOR DIMENSIONS, HOLE CLEANLINESS, EMBEDMENT DEPTH, CONCRETE TYPE, CONCRETE COMPRESSIVE STRENGTH, DRILL BIT DIAMETER, HOLE DEPTH, EDGE DISTANCE(S), ANCHOR SPACING(S), CONCRETE THICKNESS, AND ADHESIVE INJECTION.

4 / S-500 POST INSTALLED ADHESIVE ANCHOR DETAIL
3/4" = 1'-0"

NOTE: ENCASE PIPES UP TO 36" BELOW BOTTOM OF FOOTING. FOR DEEPER PIPES STEP FOOTING

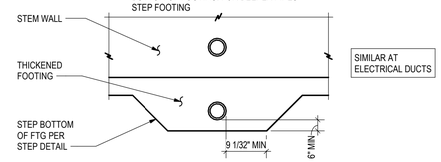

TYPICAL CONTINUOUS FOOTING-ELEVATION

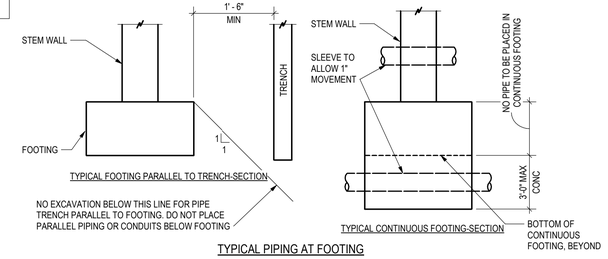

TYPICAL PIPING AT FOOTING

11 / S-500 TYP PIPING AT FOOTING
3/4" = 1'-0"

SCREW ANCHOR IN 2500 PSI MIN & 21 DAY AGE MIN DRY CONCRETE							
ANCHOR TYPE	ANCHOR AND PILOT HOLE DIA	MINIMUM EMBEDMENT H	MINIMUM EDGE DIST E	MINIMUM SPACING S	MINIMUM CONCRETE THICKNESS T	INSTALL TORQUE (FT-LB)	MAX INSTALL TORQUE (FT-LB)
SIMPSON TITEN HD (ICC-ESR 2713)	3/8"ø	2 1/2"	1 3/4"	3"	4"	10	50
	1/2"ø	3 1/4"	1 3/4"	3"	5"	10	65
	5/8"ø	4"	1 3/4"	3"	6"	10	100
	3/4"ø	5 1/2"	1 3/4"	3"	8 3/4"	20	150
HILTI KH-EZ (ICC-ESR 3027)	3/8"ø	2 1/2"	1 1/2"	3"	4"	10	40
	1/2"ø	3"	1 3/4"	3"	4 3/4"	10	45
	5/8"ø	3 1/4"	1 3/4"	4"	5"	10	85
	3/4"ø	4"	1 3/4"	4"	6"	20	115

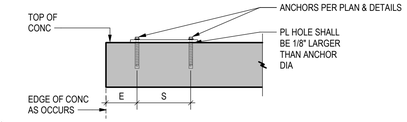

NOTES:
1. INSTALL SCREW ANCHORS PER MANUFACTURER'S INFORMATION AND ICC REPORT INSTRUCTIONS. SPECIAL INSPECTION IS REQUIRED PER SECTION 1705 OF THE IBC AND THE REQUIREMENTS OF THE ICC REPORTS. INSTALLED ANCHORS SHALL BRING CONNECTED PLIES INTO FIRM CONTACT, MEETING THE INSTALL TORQUE BUT NOT EXCEEDING THE MAXIMUM INSTALL TORQUE.
2. CONTRACTOR TO VERIFY MINIMUM EDGE DISTANCES, SPACING AND THICKNESS ARE IN ACCORDANCE WITH SCHEDULE PRIOR TO INSTALLING ANCHOR.
3. HOLES TO BE DRILLED WITH ROTARY DRILL ONLY. WHEN INSTALLING DRILLED-IN ANCHORS IN EXISTING REINFORCED CONCRETE, USE CARE AND CAUTION TO AVOID CUTTING OR DAMAGING THE EXISTING REINFORCING BARS. MAINTAIN A REASONABLE CLEARANCE BETWEEN REINFORCEMENT AND THE DRILLED-IN ANCHOR. FILL ABANDONED HOLES WITH HIGH STRENGTH GROUT.
4. THE SPECIAL INSPECTOR MUST BE ON THE JOBSITE PERIODICALLY DURING ANCHOR INSTALLATION TO VERIFY ANCHOR TYPE, ANCHOR DIMENSIONS, HOLE CLEANLINESS, EMBEDMENT DEPTH, CONCRETE TYPE, CONCRETE COMPRESSIVE STRENGTH, DRILL BIT DIAMETER, HOLE DEPTH, EDGE DISTANCE(S), ANCHOR SPACING(S), CONCRETE THICKNESS, AND TIGHTENING TORQUE.

5 / S-500 SCREW ANCHOR DETAIL
3/4" = 1'-0"

CAIRN DESIGN LLC
leading high performance building solutions
1805 Sheely Drive
Fort Collins, CO 80526
voice: (970)-286-7968
cairndesignllc.com

COLORADO LICENSED
Steven Jacobs
PROFESSIONAL ENGINEER

JVA CONSULTING ENGINEERS
JVA, Inc. 213 Linden Street, Suite 200
Fort Collins, CO 80524 970.225.9099
www.jvajva.com
Boulder • Fort Collins • Winter Park
Glenwood Springs • Denver

PROJECT:
LOGAN COUNTY COMMUNITY CENTER ADDITION

SHEET TITLE:
SCHEDULES & DETAILS

ISSUE DATE:
BID/ PERMIT
12/16/2022

REVISIONS:

PROJECT NO.:
2208

SHEET NO.
S-500

As instruments of service, these drawings and the design represented are the permanent property of Cairn Design, LLC. Reproduction or use of these drawings other than for the project intended, without written consent from the Designer, is prohibited. Unauthorized use will be subject to legal action.

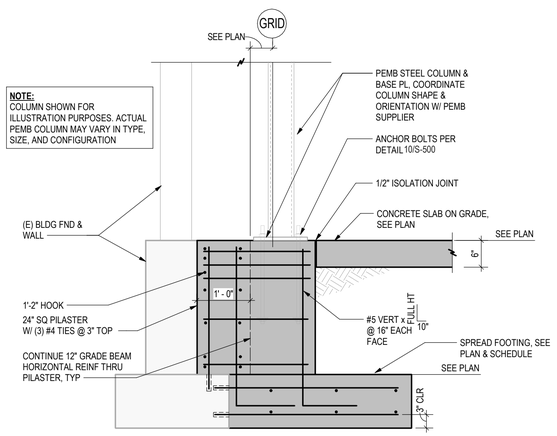

TYP PILASTER FOUNDATION AT (E) BLDG AT END WALL COLUMN

5 S-501 3/4" = 1'-0"

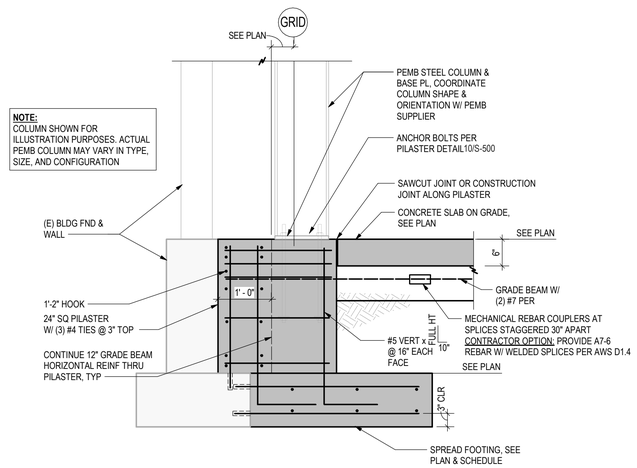

TYP PILASTER FOUNDATION @ (E) BLDG

6 S-501 3/4" = 1'-0"

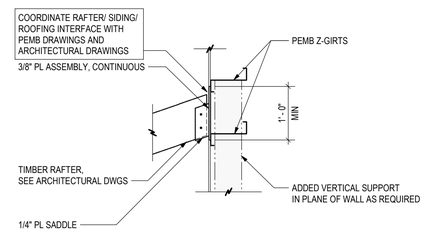

COVERED PORCH ALTERNATE - PORCH ROOF/ RAFTER FRAMING DETAIL

7 S-501 3/4" = 1'-0"

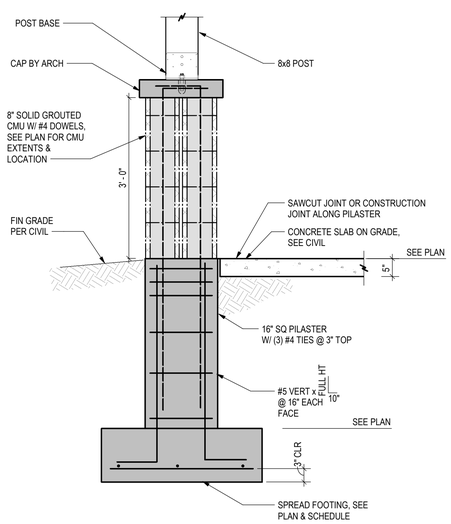

COVERED PORCH ALTERNATE - EXTERIOR TIMBER COLUMN BASE

1 S-501 3/4" = 1'-0"

0 6" 1' 2' 3'

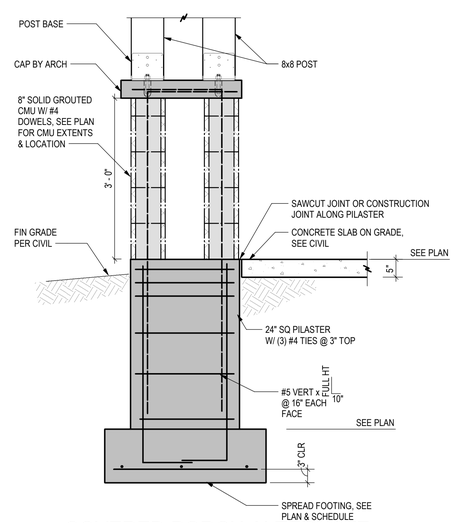

COVERED PORCH ALTERNATE - EXTERIOR TIMBER COLUMN BASE

2 S-501 3/4" = 1'-0"

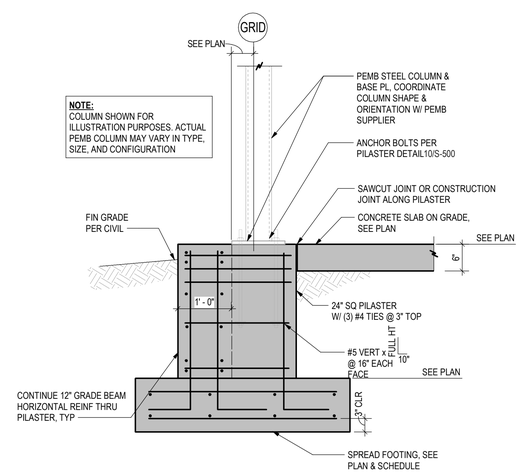

TYP EXTERIOR PILASTER FOUNDATION AT END WALL COLUMN

3 S-501 3/4" = 1'-0"

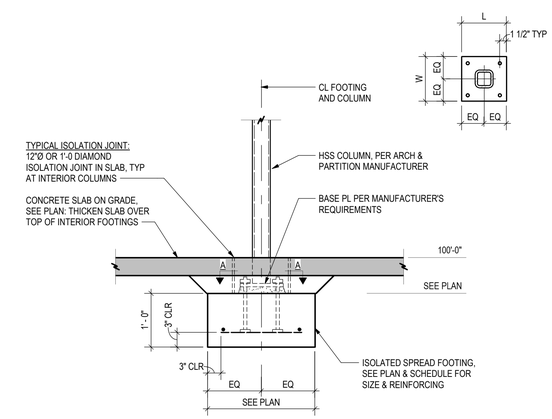

TYP ISOLATED SPREAD FOOTING

4 S-501 3/4" = 1'-0"

CAIRN DESIGN LLC
leading high performance building solutions
1805 Sheely Drive
Fort Collins, CO 80526
voice: (970)-286-7968
cairndesignllc.com

COLORADO LICENSED 43130 PROFESSIONAL ENGINEER

JVA CONSULTING ENGINEERS
JVA, Inc. 213 Linden Street, Suite 200
Fort Collins, CO 80524 970.225.9099
www.jvajva.com
Boulder • Fort Collins • Winter Park
Glenwood Springs • Denver
JVA #21638

PROJECT:

LOGAN COUNTY COMMUNITY CENTER ADDITION

SHEET TITLE:

DETAILS, SECTIONS & SCHEDULES

ISSUE DATE:

BID/ PERMIT
12/16/2022

REVISIONS:

PROJECT NO.:

2208

SHEET NO.

S-501

As instruments of service, these drawings and the design represented are the permanent property of Cairn Design, LLC. Reproduction or use of these drawings other than for the project intended, without written consent from the Designer, is prohibited. Unauthorized use will be subject to legal action.

GENERAL PROJECT NOTES:

1. ALL WORK IS TO BE PERFORMED IN COMPLIANCE WITH ALL APPLICABLE FEDERAL, STATE, AND LOCAL CODES. SECURE ALL REQUIRED PERMITS AND APPROVALS PRIOR TO COMMENCEMENT OF ANY CONSTRUCTION. ALL REFERENCE TO CODE SECTIONS HEREIN REFER TO THE APPLICABLE CODE W/ LOCAL AMMENDMENTS.
2. THE SUBCONTRACTORS ARE TO EXAMINE AND VERIFY ALL DIMENSIONS AND EXISTING CONDITIONS BOTH ON THE PLANS AND IN THE FIELD. NOTIFY THE ARCHITECT OF ANY DISCREPANCIES OR CONFLICTS PRIOR TO PROCEEDING WITH CONSTRUCTION.
3. DO NOT SCALE PRINTS. WRITTEN DIMENSIONS TAKE PRECEDENCE IN ALL CASES. REFER TO PARTITION TAGS FOR WALL TYPES.
4. THESE DRAWINGS AND SPECIFICATIONS ARE THE PROPERTY AND COPYRIGHT OF THE ARCHITECT AND SHALL NOT BE USED ON ANY OTHER WORK EXCEPT BY AGREEMENT WITH THE ARCHITECT.
5. DUTY OF COOPERATION: RELEASE OF THESE PLANS ANTICIPATES FURTHER COOPERATION AMONG THE OWNER, CONTRACTOR, AND ARCHITECT. ALTHOUGH THE ARCHITECT AND THEIR CONSULTANTS HAVE PERFORMED THEIR SERVICES WITH DUE CARE AND DILIGENCE, THEY CANNOT GUARANTEE PERFECTION. ANY AMBIGUITY OR DISCREPANCY DISCOVERED SHALL BE REPORTED IMMEDIATELY TO THE ARCHITECT. FAILURE TO COOPERATE BY NOTIFYING THE ARCHITECT SHALL NOT RELIEVE THE CONTRACTOR FROM RESPONSIBILITY FOR ALL CONSEQUENCES. CHANGES MADE FROM THE PLANS WITHOUT THE CONSENT OF THE ARCHITECT ARE UNAUTHORIZED AND SHALL RELIEVE THE ARCHITECT OF RESPONSIBILITY FOR ALL CONSEQUENCES RESULTING FROM SUCH CHANGES.
6. ALL PRODUCTS SHALL BE INSTALLED PER MANUFACTURERS' RECOMMENDATIONS.
7. ALL WORK TO BE IN ACCORDANCE WITH "GENERAL CONDITIONS OF THE CONTRACT" AND ALL OTHER CONTRACT DOCUMENTS.
8. CONTRACT DOCUMENTS ALSO INCLUDE THE PROJECT MANUAL AND SPECIFICATIONS, IF PROVIDED, AS PART OF THESE DRAWINGS IN THEIR ENTIRETY AS IF ATTACHED. THE CONTRACTOR SHALL INCLUDE ANY WORK REQUIRED TO MAKE THE END RESULT BUILDING OPERATIONAL AND OCCUPIABLE. IF EQUIPMENT, MATERIAL, AND/OR INTENT ARE NOT DETAILED IN DRAWINGS OR SPECIFICATIONS, BUT ARE OBVIOUSLY REQUIRED AS INDUSTRY STANDARD FOR OPERABLE CONDITIONS, THIS WORK SHALL BE INCLUDED IN BASE BID.
9. IF THE OWNER DOES NOT ACCEPT THE CONTRACTOR'S SUBSTITUTED SELECTION, THE ORIGINAL EQUIPMENT OR MATERIALS CHOSEN BY THE OWNER OR ARCHITECT WILL BE PROVIDED WITH NO ADDITIONAL COST.
10. DO NOT USE CADMIUM OR CADMIUM-PLATED PRODUCTS OR PRODUCTS CONTAINING CADMIUM FOR WORK IN PLACE WITHOUT SPECIFIC WRITTEN APPROVAL BY THE OWNER. DO NOT USE ASBESTOS OR ASBESTOS-CONTAINING PRODUCTS OR ANY OTHER HAZARDOUS MATERIAL FOR WORK IN PLACE WITHOUT SPECIFIC WRITTEN APPROVAL BY THE OWNER.
11. TYPOGRAPHICAL ERRORS OR ERRORS OF SPELLING SHALL BE BROUGHT TO THE ARCHITECT'S ATTENTION FOR CLARIFICATION. INTERPRETATION OF THE MEANING OF ABBREVIATIONS OR MISTYPED OR MISSPELLED WORDS, WITHOUT CLARIFICATION FROM THE ARCHITECT, WILL BE DONE BY THE CONTRACTOR WITH ACCEPTANCE OF RESPONSIBILITY FOR THAT INTERPRETATION AND ALL CONSEQUENCES ARRIVING THEREFROM.
12. NOTE: ALL DIMENSIONS ARE TO THE FACE OF WALL , FACE OF UNIT, CENTER LINE OF WALL, OR CENTER LINE OF UNIT AS INDICATED (TYPICAL UNLESS OTHERWISE INDICATED).
13. THE TERM "PROVIDE" AS USED HEREIN SHALL MEAN THAT CONTRACTOR SHALL FURNISH AND INSTALL SAID ITEM, CONSTRUCTION, EQUIPMENT, MATERIALS, ETC., FOR A COMPLETE, FINISHED INSTALLATION.
14. GENERAL CONTRACTOR SHALL BE RESPONSIBLE FOR COORDINATION OF ALL TRADES DOING WORK AND COORDINATION WITH OWNER AND OWNER'S SUB-CONTRACTORS REGARDING INSTALLATION AND PROVISION FOR ALL EQUIPMENT, MATERIALS, AND CONSTRUCTIONS INDICATED "BY OWNER", "BY OTHERS", OR "BY OWNER'S SEPARATE CONTRACTOR" ON THESE DOCUMENTS.
15. ALL PROPERTY DAMAGED IN ORDER TO EXECUTE THE REQUIRED CONSTRUCTION SHALL BE RESTORED TO ITS ORIGINAL CONDITION OR REPLACED, INCLUDING, BUT NOT LIMITED TO, FINISH, STRUCTURE, EQUIPMENT, FIXTURES, CIRCUITS, PIPING, AND INSULATION.
16. PATCH, REPAIR, AND RESTORE ALL AREAS IMPACTED BY THE WORK TO THEIR ORIGINAL CONDITION OR TO THAT OF ADJACENT SURFACES.
17. CONDITIONS OF WORK: ALL BIDDERS, CONTRACTORS, AND SUBCONTRACTORS MUST INFORM THEMSELVES FULLY OF THE CONDITIONS RELATING TO THE CONSTRUCTION OF THE PROJECT AND THE EMPLOYMENT OF LABOR THEREIN. FAILURE TO DO SO WILL NOT RELIEVE A CONTRACTOR OF THE OBLIGATION TO FURNISH ALL MATERIAL AND LABOR NECESSARY TO CARRY OUT THE PROVISIONS OF THE CONTRACT. INSOFAR AS POSSIBLE, THE CONTRACTOR, IN CARRYING OUT THE WORK, MUST EMPLOY SUCH METHODS OR MEANS AS WILL NOT CAUSE ANY INTERRUPTION OF OR INTERFERENCE WITH THE WORK OF ANY OTHER CONTRACTOR, OR THE OWNER'S SCHEDULED USE OF THE BUILDING, AND FURTHERMORE, WILL ACCOMPLISH THE WORK WITH MINIMAL DAMAGE, DEMOLITION, CUTTING, OR PATCHING TO THE EXISTING BUILDING.

GENERAL DEMOLITION NOTES:

1. THE EXISTING CONDITIONS SHOWN IN THESE DRAWINGS WERE DEVELOPED FROM THE ORIGINAL BUILDING PLANS AND SITE SURVEYS. THEY ARE REPRESENTATIVE, BUT ARE NOT INTENDED TO BE COMPLETE, ACCURATE, OR ALL-ENCOMPASSING IN DISPLAYING ALL EXISTING CONDITIONS. NEITHER THE OWNER, NOR THE ARCHITECT, WARRANTS, IMPLIES, OR ENSURES THE ACCURACY OR COMPLETENESS OF THE DEMOLITION REQUIREMENTS. IT IS COMPULSORY THAT THE GENERAL CONTRACTOR AND/OR SUB-CONTRACTORS VISIT THE EXISTING BUILDING TO VERIFY THE CONDITIONS AND SATISFY THEMSELVES AS TO THE EXTENT AND TYPE OF DEMOLITION REQUIRED IN THE PROJECT. THE CONTRACTOR SHALL ALSO VERIFY THE EXISTING CONDITIONS ADEQUATELY TO ESTABLISH THEIR ABILITY TO PERFORM THE NEW WORK DESCRIBED ON THE DRAWINGS.
2. GENERAL CONTRACTOR SHALL BE RESPONSIBLE FOR COORDINATION OF ALL TRADES DOING WORK AND COORDINATION WITH OWNER AND OWNER'S SUB-CONTRACTORS REGARDING DEMOLITION WORK TO BE PERFORMED AS REQUIRED IN THESE DOCUMENTS.
3. CONTRACTOR TO PERFORM DEMOLITION, REMOVAL, AND ALTERATION WORK WITH DUE CARE, INCLUDING SHORING, BRACING, AND OTHER MEASURES. BE RESPONSIBLE FOR ANY DAMAGE THAT MAY BE CAUSED BY SUCH WORK TO ANY PARTS OF EXISTING STRUCTURE OR ITEMS DESIGNATED FOR RE-USE.
4. ITEMS OF SALVAGEABLE VALUE ARE TO BE STORED IN A SAFE, DRY AREA TO BE DETERMINED BY THE OWNER AND THE CONTRACTOR.
5. MAKE EXPLORATION DEMOLITION AND PROBES AS NECESSARY TO DETERMINE ANY REQUIRED PROTECTIVE MEASURES BEFORE PROCEEDING WITH DEMOLITION AND REMOVAL.
6. MAINTAIN JOB SITE FREE OF TRASH, DEBRIS, AND ACCUMULATIONS OF WASTE MATERIALS ON A DAILY BASIS.
7. REFER TO DRAWINGS FOR DEMOLITION REQUIRED.

ABBREVIATIONS:

A.B. - ANCHOR BOLT
A/E - ARCHITECT-ENGINEER
ACT - ACOUSTICAL CEILING TILE
ADA - AMERICANS WITH DISABILITIES ACT
ADD. - ADDITION
ADDL - ADDITIONAL
ADJ - ADJUSTABLE
AL/ALUM - ALUMINUM
ALT - ALTERNATE
ANCH - ANCHOR
ARCH - ARCHITECTURE
ASPH - ASPHALT
AUTO - AUTOMATIC
BALL - BALLAST
BD - BOARD
BLDG - BUILDING
BLK - BLOCK
BM - BEAM
BOTT - BOTTOM
BSMT - BASEMENT
C.J. - CONTROL JOINT
C.L. - CENTER LINE
C.T. - CERAMIC TILE
C.W. - COLD WATER
CAB - CABINET
CARP - CARPET
CEM - CEMENT
CK'D - CHECKED
CL/CLOS/CLO - CLOSET
CLG - CEILING
CMU - CONCRETE MASONRY UNIT
COL - COLUMN
COMP - COMPACT
CONC - CONCRETE
CONF - CONFERENCE
CONN - CONNECTION
CONST - CONSTRUCTION
CONT - CONTINUOUS
CONTR - CONTRACTOR
CORR - CORRIDOR
D.S. - DOWNSPOUT
DBL - DOUBLE
DEMO - DEMOLITION
DESCR - DESCRIPTION
DET/DTL - DETAIL
DIA - DIAMETER
DIM - DIMENSION
DISP - DISPENSER
DISP - DISPOSAL
DIV - DIVIDER
DN - DOWN
DR - DOOR
DWG - DRAWING
EA - EACH
EL - ELEVATION
ELEV - ELEVATOR
ENT - ENTRY OR ENTRANCE
EQ - EQUAL
EQUIP - EQUIPMENT
EWC - ELECTRIC WATER COOLER
EXG/EXIST - EXISTING
EXP - EXPANSION
EXT - EXTERIOR
F.D. - FLOOR DRAIN
F.E. - FIRE EXTINGUISHER
F.F. - FINISH FLOOR
F.O. - FINISHED OPENING
FDN - FOUNDATION
FEM - FEMININE
FIN - FINISH
FL - FLOOR
FLUOR - FLUORESCENT
FR - FRAME
FTG - FOOTING
FURN - FURNISHED/FURNITURE
G.C. - GENERAL CONTRACTOR
GA - GAUGE
GAL/GALV - GALVANIZED
GEN - GENERAL
GL - GLASS
GWB - GYPSUM WALL BOARD
H.C. - HANDICAPPED
H.C. - HOLLOW CORE
H.M. - HOLLOW METAL
H.W. - HOT WATER
HDR - HEADER
HDW - HARDWARE
HOR/HORIZ - HORIZONTAL
HT/HGT/HGHT - HEIGHT
INS/INSUL - INSULATION
INST - INSTALL
INT - INTERIOR
JAN - JANITOR
JT - JOINT
KIT - KITCHEN
LAM - LAMINATED
LAND - LANDING
LAV - LAVATORY
LGMF - LIGHT GAUGE METAL FRAMING
LIM - LIMIT
LIN - LINTEL
LIN. FT. - LINEAR FOOT
LOC - LOCATION
LOUV - LOUVER
M.O. - MASONRY OPENING
MAN./MANUF, - MANUFACTURER
MAR/MARB - MARBLE
MAX - MAXIMUM
MECH - MECHANICAL
MEM/MEMB - MEMBRANE
MIN - MINIMUM
MISC - MISCELLANEOUS
MTL - METAL
MULL - MULLION
N.I.C. - NOT IN CONTRACT
NAP - NAPKIN
NO - NUMBER
NOM - NOMINAL
OFF - OFFICE
O.H. - OPPOSITE HAND
OP'NG - OPENING
P.B. - PARTICLE BOARD
P.T. - PAVER TILE
PART - PARTITION
PER/PERIM - PERIMETER
PL - PLATE
P. LAM - PLASTIC LAMINATE
PLAS - PLASTER
PLY - PLYWOOD
PLYWD - PLYWOOD
PREP - PREPARE/PREPARATION
Q.T. - QUARRY TILE
R.B. - RUBBER BASE
R.D. - ROOF DRAIN
R.O. - ROUGH OPENING
R.O.W. - RIGHT-OF-WAY
R.T. RUBBER TILE
RA/RAD - RADIUS
RECEPT - RECEPTACLE
RECEPT - RECEPTION
REF/REFER - REFERENCE
REFRIG - REFRIGERATOR
REINF - REINFORCE
REM - REMOVABLE
RENO - RENOVATION
REQ/REQD - REQUIRED
RESIL - RESILIENT
RET - RETAIN
RM - ROOM
S. & V. - STAIN AND VARNISH
S.C. - SOLID CORE
SCHED - SCHEDULE/SCHEDULED
S.S. - STAINLESS STEEL
SECT - SECTION
SHT - SHEET
SIM - SIMILAR
SPECS - SPECIFICATIONS
SQ - SQUARE
ST. - STAINLESS
STD - STANDARD
STL - STEEL
STO/STOR - STORAGE
STRUCT - STRUCTURE
SUSP - SUSPEND
SW - SEWER
SYN/SYNTH - SYNTHETIC
SYS - SYSTEM
T. & P. - TEXTURE AND PAINT
T. & Q. - TONGUE AND GROOVE
T.O.F. - TOP OF FOOTING
T.O.W. - TOP OF WALL
T.P. - TOILET PAPER
T.S. - TUBE STEEL
TAM/TAMP - TAMPON
TEMP - TEMPORARY
TERR - TERRAZZO
TEXT - TEXTURE
TYP - TYPICAL
U.C. - UNDERCOUNTER
U.G. - UNDERGROUND
UNO / UON - UNLESS OTHERWISE NOTED
V.C.T. - VINYL TILE
VEN - VENEER
VER - VERIFY
VERT - VERTICAL
VEST - VESTIBULE
VWC - VINYL WALL COVERING
W - STANDARD WIDE-FLANGE SHAPE
W.C. - WATER CLOSET
W.G. - WIRE GLASS
W.W.F. - WELDED WIRE FABRIC
W/ - WITH
W/O - WITHOUT
WD - WOOD
WDW - WINDOW
WT/WGT/WGHT - WEIGHT

CAIRN DESIGN LLC
leading high performance building solutions

1805 Sheely Drive
Fort Collins, CO 80526

voice: (970)-286-7968

cairndesignllc.com

STATE OF COLORADO
KATHERINE W. LIGON
404152
LICENSED ARCHITECT

PROJECT:

LOGAN COUNTY COMMUNITY CENTER ADDITION

SHEET TITLE:

GENERAL PROJECT NOTES, GENERAL DEMOLITION NOTES, AND ABBREVIATIONS

ISSUE DATE:

BID/PERMIT
12/16/2022

REVISIONS:

-
-
-
-

PROJECT NO.:
2208

SHEET NO.

A-02

As instruments of service, these drawings and the design represented are the permanent property of Cairn Design, LLC. Reproduction or use of these drawings other than for the project intended, without written consent from the Designer, is prohibited. Unauthorized use will be subject to legal action.

ARCHITECTURAL SPECIFICATIONS

- DIVISION 01. GENERAL REQUIREMENTS

AT TIME OF ISSUE OF PERMIT SET, THE OWNER'S REPRESENTATIVE IS TOBY TAYLOR WITH WELD COUNTY.

IF THERE ARE ANY DISCREPANCIES BETWEEN THE PLANS AND SPECIFICATIONS, THE PLANS SUPERSEDE. IN ADDITION TO THESE SPECIFICATIONS, REFER TO GENERAL NOTES ON DRAWING SHEETS.

WORKMANSHIP MUST BE OF HIGHEST QUALITY, PERFORMED IN A PROFESSIONAL MANNER AND IN ACCORDANCE WITH THE MANUFACTURER'S SPECIFICATIONS AND RECOMMENDATIONS FOR THE PRODUCT OR MATERIAL BEING SUPPLIED AND/OR INSTALLED.

UNLESS DIRECTED OTHERWISE ON THE PLANS, PROVIDE SHOP DRAWINGS AND SAMPLES AS INDICATED:
PRODUCT SUBMITTALS AND/OR SHOP DRAWINGS: 4 SETS OF HARD COPY FOR APPROVAL. ELECTRONIC SUBMITTALS ARE ACCEPTABLE AND PREFERRED.

PRODUCT SAMPLES: 4 SAMPLES.

ALL SUBMITTALS, SHOP DRAWINGS AND SAMPLES SHALL BE DELIVERED TO THE ARCHITECT FOR REVIEW AND DISTRIBUTION.

INSURANCE REQUIREMENTS ARE TO BE AS DETERMINED BY THE GENERAL CONTRACTOR AND/OR THE OWNER'S DESIGNATED REPRESENTATIVE.

- DIVISION 02. SITE CONSTRUCTION

SECTION 023113 - CHAIN LINK FENCES AND GATES
PART 1 - GENERAL
0.1 SUMMARY
A. SECTION INCLUDES:
1. CHAIN-LINK FENCES.
2. SWING GATES.
B. PRODUCT DATA: FOR EACH TYPE OF PRODUCT.
1. INCLUDE CONSTRUCTION DETAILS, MATERIAL DESCRIPTIONS, DIMENSIONS OF INDIVIDUAL COMPONENTS AND PROFILES, AND FINISHES FOR THE FOLLOWING:
a. FENCE AND GATE POSTS, RAILS, AND FITTINGS.
b. CHAIN-LINK FABRIC, REINFORCEMENTS, AND ATTACHMENTS.
c. ACCESSORIES: BARBED WIRE.
d. GATES AND HARDWARE.
C. SHOP DRAWINGS: FOR EACH TYPE OF FENCE AND GATE ASSEMBLY.
1. INCLUDE PLANS, ELEVATIONS, SECTIONS, DETAILS, AND ATTACHMENTS TO OTHER WORK.
2. INCLUDE ACCESSORIES, HARDWARE, GATE OPERATION, AND OPERATIONAL CLEARANCES.
D. DELEGATED-DESIGN SUBMITTAL: FOR STRUCTURAL PERFORMANCE OF CHAIN-LINK FENCE AND GATE FRAMEWORKS, INCLUDING ANALYSIS DATA SIGNED AND SEALED BY THE QUALIFIED INSTALLER RESPONSIBLE FOR THEIR PREPARATION.
0.2 INFORMATIONAL SUBMITTALS

PRODUCT CERTIFICATES: FOR EACH TYPE OF CHAIN-LINK FENCE, AND GATE.
0.3 FIELD CONDITIONS
A. FIELD MEASUREMENTS: VERIFY LAYOUT INFORMATION FOR CHAIN-LINK FENCES AND GATES SHOWN ON DRAWINGS IN RELATION TO PROPERTY SURVEY AND EXISTING STRUCTURES. VERIFY DIMENSIONS BY FIELD MEASUREMENTS.
0.4 WARRANTY
A. SPECIAL WARRANTY: INSTALLER AGREES TO REPAIR OR REPLACE COMPONENTS OF CHAIN-LINK FENCES AND GATES THAT FAIL IN MATERIALS OR WORKMANSHIP WITHIN SPECIFIED WARRANTY PERIOD.
1. FAILURES INCLUDE, BUT ARE NOT LIMITED TO, THE FOLLOWING:
a. FAILURE TO COMPLY WITH PERFORMANCE REQUIREMENTS.
b. DETERIORATION OF METALS, METAL FINISHES, AND OTHER MATERIALS BEYOND NORMAL WEATHERING.
2. WARRANTY PERIOD: FIVE YEARS FROM DATE OF SUBSTANTIAL COMPLETION.
PART 2 - PRODUCTS
0.1 PERFORMANCE REQUIREMENTS
A. STRUCTURAL PERFORMANCE: CHAIN-LINK FENCE AND GATE FRAMEWORKS SHALL WITHSTAND THE DESIGN WIND LOADS AND STRESSES FOR FENCE HEIGHT(S) AND UNDER EXPOSURE CONDITIONS INDICATED ACCORDING TO ASCE/SEI 7.
1. DESIGN WIND LOAD: PER SITE LOCATION.
a. MINIMUM POST SIZE: DETERMINE ACCORDING TO ASTM F 1043 FOR POST SPACING NOT TO EXCEED 10 FEET (3 M) FOR MATERIAL GROUP IA, ASTM F 1043, SCHEDULE 40 STEEL PIPE.
b. MINIMUM POST SIZE AND MAXIMUM SPACING: DETERMINE ACCORDING TO CLFMI WLG 2445, BASED ON MESH SIZE AND PATTERN SPECIFIED.
B. LIGHTNING PROTECTION SYSTEM: MAXIMUM RESISTANCE-TO-GROUND VALUE OF 25 OHMS AT EACH GROUNDING LOCATION ALONG FENCE UNDER NORMAL DRY CONDITIONS.
0.2 CHAIN-LINK FENCE FABRIC
A. GENERAL: PROVIDE FABRIC IN ONE-PIECE HEIGHTS MEASURED BETWEEN TOP AND BOTTOM OF OUTER EDGE OF SELVAGE KNUCKLE OR TWIST ACCORDING TO "CLFMI PRODUCT MANUAL" AND REQUIREMENTS INDICATED BELOW:
1. FABRIC HEIGHT: 6'-0".
2. STEEL WIRE FOR FABRIC: WIRE DIAMETER OF 0.192 INCH (4.88 MM).
a. MESH SIZE: 2-1/8 INCHES (54 MM).
b. ZINC-COATED FABRIC: ASTM A 392, TYPE II, CLASS 1, 1.2 OZ./SQ. FT. (366 G/SQ. M) WITH ZINC COATING APPLIED BEFORE WEAVING.
c. COAT SELVAGE ENDS OF METALLIC-COATED FABRIC BEFORE THE WEAVING PROCESS WITH MANUFACTURER'S STANDARD CLEAR PROTECTIVE COATING.
3. SELVAGE: KNUCKLED AT BOTH SELVAGES
0.3 FENCE FRAMEWORK
A. POSTS AND RAILS: ASTM F 1043 FOR FRAMEWORK, INCLUDING RAILS, BRACES, AND LINE; TERMINAL; AND CORNER POSTS. PROVIDE MEMBERS WITH MINIMUM DIMENSIONS AND WALL THICKNESS ACCORDING TO ASTM F 1043 BASED ON THE FOLLOWING:
1. FENCE HEIGHT: 72 INCHES (1830 MM).
2. LIGHT-INDUSTRIAL-STRENGTH MATERIAL: GROUP IC-L, ROUND STEEL PIPE, ELECTRIC-RESISTANCE-WELDED PIPE.
a. LINE POST: 1.9 INCHES (48 MM) IN DIAMETER.
b. END, CORNER, AND PULL POSTS: 2.375 INCHES (60 MM).
3. HORIZONTAL FRAMEWORK MEMBERS: RAILS ACCORDING TO ASTM F 1043.
a. TOP RAIL: 1.66 INCHES (42 MM) IN DIAMETER.
4. BRACE RAILS: ASTM F 1043.
5. METALLIC COATING FOR STEEL FRAMEWORK:
a. TYPE A: NOT LESS THAN MINIMUM 2.0-OZ./SQ. FT. (0.61-KG/SQ. M) AVERAGE ZINC COATING ACCORDING TO ASTM A 123/A 123M OR 4.0-OZ./SQ. FT. (1.22-KG/SQ. M) ZINC COATING ACCORDING TO ASTM A 653/A 653M.
0.4 SWING GATES
A. GENERAL: ASTM F 900 FOR GATE POSTS AND DOUBLE SWING GATE TYPES.
1. GATE LEAF WIDTH: AS INDICATED.
2. FRAMEWORK MEMBER SIZES AND STRENGTH: BASED ON GATE FABRIC HEIGHT OF 72 INCHES (1830 MM) OR LESS.
B. EXTENDED GATE POSTS AND FRAME MEMBERS: FABRICATE GATE POSTS AND FRAME END MEMBERS TO EXTEND 12 INCHES (300 MM) ABOVE TOP OF CHAIN-LINK FABRIC AT BOTH ENDS OF GATE FRAME TO ATTACH BARBED WIRE ASSEMBLIES.
C. HARDWARE:
1. HINGES: 360-DEGREE INWARD AND OUTWARD SWING.
2. LATCH: PERMITTING OPERATION FROM BOTH SIDES OF GATE WITH PROVISION FOR PADLOCKING ACCESSIBLE FROM BOTH SIDES OF GATE.
0.5 FITTINGS
A. PROVIDE FITTINGS ACCORDING TO ASTM F 626.
B. POST CAPS: PROVIDE FOR EACH POST.
1. PROVIDE LINE POST CAPS WITH LOOP TO RECEIVE TENSION WIRE OR TOP RAIL.
C. RAIL AND BRACE ENDS: FOR EACH GATE, CORNER, PULL, AND END POST.
D. TENSION AND BRACE BANDS.
E. TENSION BARS: PROVIDE ONE BAR FOR EACH GATE AND END POST, AND TWO FOR EACH CORNER AND PULL POST, UNLESS FABRIC IS INTEGRALLY WOVEN INTO POST.
F. TRUSS ROD ASSEMBLIES: STEEL, HOT-DIP GALVANIZED AFTER THREADING ROD AND TURNBUCKLE OR OTHER MEANS OF ADJUSTMENT.
G. BARBED WIRE ARMS: PRESSED STEEL OR CAST IRON, WITH CLIPS, SLOTS, OR OTHER MEANS FOR ATTACHING STRANDS OF BARBED WIRE, AND MEANS FOR ATTACHING TO POSTS, FOR EACH POST UNLESS OTHERWISE INDICATED, AND AS FOLLOWS:
1. PROVIDE LINE POSTS WITH ARMS THAT ACCOMMODATE TOP RAIL OR TENSION WIRE.
2. PROVIDE CORNER ARMS AT FENCE CORNER POSTS UNLESS EXTENDED POSTS ARE INDICATED.
3. SINGLE-ARM TYPE: TYPE I, SLANTED ARM.
H. TIE WIRES, CLIPS, AND FASTENERS: ACCORDING TO ASTM F 626.
1. STANDARD ROUND WIRE TIES: FOR ATTACHING CHAIN-LINK FABRIC TO POSTS, RAILS, AND FRAMES, ACCORDING TO THE FOLLOWING:
a. HOT-DIP GALVANIZED STEEL: 0.106-INCH- (2.69-MM-) DIAMETER WIRE; GALVANIZED COATING THICKNESS MATCHING COATING THICKNESS OF CHAIN-LINK FENCE FABRIC.
0.6 BARBED WIRE
A. STEEL BARBED WIRE: ASTM A 121, THREE-STRAND BARBED WIRE, 0.099-INCH- (2.51-MM-) DIAMETER LINE WIRE WITH 0.080-INCH- (2.03-MM-) DIAMETER, FOUR-POINT ROUND BARBS SPACED NOT MORE THAN 5 INCHES (127 MM) O.C.
1. ALUMINUM COATING: TYPE A.
2. ZINC COATING: TYPE Z, CLASS 3.
0.7 GROUT AND ANCHORING CEMENT
A. NONSHRINK, NONMETALLIC GROUT: FACTORY-PACKAGED, NONSTAINING, NONCORROSIVE, NONGASEOUS GROUT COMPLYING WITH ASTM C 1107)/C 1107M. PROVIDE GROUT, RECOMMENDED IN WRITING BY MANUFACTURER, FOR EXTERIOR APPLICATIONS.
B. ANCHORING CEMENT: FACTORY-PACKAGED, NONSHRINK, NONSTAINING, HYDRAULIC-CONTROLLED EXPANSION CEMENT FORMULATION FOR MIXING WITH WATER AT PROJECT SITE TO CREATE POURABLE ANCHORING, PATCHING, AND GROUTING COMPOUND. PROVIDE FORMULATION THAT IS RESISTANT TO EROSION FROM WATER EXPOSURE WITHOUT NEEDING PROTECTION BY A SEALER OR WATERPROOF COATING, AND THAT IS RECOMMENDED IN WRITING BY MANUFACTURER FOR EXTERIOR APPLICATIONS.

PART 3 - EXECUTION
0.1 EXAMINATION
A. EXAMINE AREAS AND CONDITIONS, WITH INSTALLER PRESENT, FOR COMPLIANCE WITH REQUIREMENTS FOR SITE CLEARING, EARTHWORK, PAVEMENT WORK, AND OTHER CONDITIONS AFFECTING PERFORMANCE OF THE WORK.
1. DO NOT BEGIN INSTALLATION BEFORE FINAL GRADING IS COMPLETED UNLESS OTHERWISE PERMITTED BY ARCHITECT.
B. PROCEED WITH INSTALLATION ONLY AFTER UNSATISFACTORY CONDITIONS HAVE BEEN CORRECTED.
0.2 PREPARATION
A. STAKE LOCATIONS OF FENCE LINES, GATES, AND TERMINAL POSTS. DO NOT EXCEED INTERVALS OF 500 FEET (152 M) OR LINE OF SIGHT BETWEEN STAKES. INDICATE LOCATIONS OF UTILITIES, LAWN SPRINKLER SYSTEM, UNDERGROUND STRUCTURES, BENCHMARKS, AND PROPERTY MONUMENTS.
0.3 CHAIN-LINK FENCE INSTALLATION
A. INSTALL CHAIN-LINK FENCING ACCORDING TO ASTM F 567 AND MORE STRINGENT REQUIREMENTS SPECIFIED.
B. POST EXCAVATION: DRILL OR HAND-EXCAVATE HOLES FOR POSTS TO DIAMETERS AND SPACINGS INDICATED, IN FIRM, UNDISTURBED SOIL.
C. POST SETTING: SET POSTS BY MECHANICALLY DRIVING INTO SOIL AT INDICATED SPACING INTO FIRM, UNDISTURBED SOIL.
1. VERIFY THAT POSTS ARE SET PLUMB, ALIGNED, AND AT CORRECT HEIGHT AND SPACING, AND HOLD IN POSITION DURING SETTING WITH CONCRETE OR MECHANICAL DEVICES.
2. CONCRETE FILL: PLACE CONCRETE AROUND CORNER AND GATE POSTS TO DIMENSIONS INDICATED AND VIBRATE OR TAMP FOR CONSOLIDATION. PROTECT ABOVE GROUND PORTION OF POSTS FROM CONCRETE SPLATTER.
a. EXPOSED CONCRETE: EXTEND 2 INCHES (50 MM) ABOVE GRADE; SHAPE AND SMOOTH TO SHED WATER.
3. MECHANICALLY DRIVEN POSTS: DRIVE INTO SOIL TO DEPTH OF 36 INCHES (914 MM). PROTECT POST TOP TO PREVENT DISTORTION.
D. CHAIN-LINK FABRIC: APPLY FABRIC TO OUTSIDE OF ENCLOSING FRAMEWORK. LEAVE 1-INCH (25-MM-)] BOTTOM CLEARANCE BETWEEN FINISH GRADE OR SURFACE AND BOTTOM SELVAGE UNLESS OTHERWISE INDICATED. PULL FABRIC TAUT AND TIE TO POSTS, RAILS, AND TENSION WIRES. ANCHOR TO FRAMEWORK SO FABRIC REMAINS UNDER TENSION AFTER PULLING FORCE IS RELEASED.
E. BARBED WIRE: INSTALL BARBED WIRE UNIFORMLY SPACED, ANGLED TOWARD SECURITY SIDE OF FENCE. PULL WIRE TAUT, INSTALL SECURELY TO EXTENSION ARMS, AND SECURE TO END POST OR TERMINAL ARMS.
0.4 GATE INSTALLATION
A. INSTALL GATES ACCORDING TO MANUFACTURER'S WRITTEN INSTRUCTIONS, LEVEL, PLUMB, AND SECURE FOR FULL OPENING WITHOUT INTERFERENCE. ATTACH FABRIC AS FOR FENCING. ATTACH HARDWARE USING TAMPER-RESISTANT OR CONCEALED MEANS. INSTALL GROUND-SET ITEMS IN CONCRETE FOR ANCHORAGE. ADJUST HARDWARE FOR SMOOTH OPERATION.

- DIVISION 03. CONCRETE

SECTION 03 35 20 CHEMICAL STAINED CONCRETE
PART 1 GENERAL
1.1 SECTION INCLUDES
A. CHEMICAL STAINED CONCRETE.
1.2 RELATED REQUIREMENTS
A. CAST-IN-PLACE CONCRETE.
1.3 SUBMITTALS
A. COMPLY WITH SECTION 01330 (01 33 00) – SUBMITTAL PROCEDURES.
B. PRODUCT DATA: SUBMIT MANUFACTURER'S PRODUCT DATA, INCLUDING SURFACE PREPARATION AND APPLICATION INSTRUCTIONS.
C. SAMPLES: SUBMIT MANUFACTURER'S SAMPLES OF STANDARD COLORS.
D. MANUFACTURER'S CERTIFICATION: SUBMIT MANUFACTURER'S CERTIFICATION THAT MATERIALS COMPLY WITH SPECIFIED REQUIREMENTS AND ARE SUITABLE FOR INTENDED APPLICATION.
E. APPLICATOR'S PROJECT REFERENCES: SUBMIT APPLICATOR'S LIST OF SUCCESSFULLY COMPLETED CHEMICAL STAINED CONCRETE PROJECTS, INCLUDING PROJECT NAME AND LOCATION, NAME OF ARCHITECT, AND TYPE AND QUANTITY OF MATERIALS APPLIED.
1.4 QUALITY ASSURANCE
A. APPLICATOR'S QUALIFICATIONS:
1. APPLICATOR REGULARLY ENGAGED, FOR PRECEDING 5 YEARS, IN APPLICATION OF CHEMICAL STAINED CONCRETE OF SIMILAR TYPE TO THAT SPECIFIED.
2. EMPLOY PERSONS TRAINED FOR APPLICATION OF CHEMICAL STAINED CONCRETE.
B. MOCK-UPS:
1. CONSTRUCT MOCK-UPS OF CHEMICAL STAINED CONCRETE:
a. USE SAME MATERIALS AND METHODS FOR USE IN THE WORK.
b. LOCATION: DETERMINED BY ARCHITECT.
c. MINIMUM SIZE: 4 FEET BY 4 FEET.
2. RECEIVE APPROVAL OF MOCK-UPS BY ARCHITECT FOR PATTERNS, COLORS, TEXTURES, SEALING, SPECIAL EFFECTS, AND WORKMANSHIP BEFORE APPLICATION OF CHEMICAL STAINED CONCRETE.
3. APPROVED MOCK-UPS:
a. STANDARD FOR PATTERNS, COLORS, TEXTURES, SEALING, SPECIAL EFFECTS, AND WORKMANSHIP OF CHEMICAL STAINED CONCRETE.
b. RETAIN THROUGH COMPLETION OF WORK FOR USE AS QUALITY STANDARD.
1.5 DELIVERY, STORAGE, AND HANDLING
A. DELIVERY AND ACCEPTANCE REQUIREMENTS: DELIVER MATERIALS TO SITE IN MANUFACTURER'S ORIGINAL, UNOPENED CONTAINERS AND PACKAGING, WITH LABELS CLEARLY IDENTIFYING PRODUCT NAME AND MANUFACTURER.
B. STORAGE AND HANDLING REQUIREMENTS:
1. STORE AND HANDLE MATERIALS IN ACCORDANCE WITH MANUFACTURER'S INSTRUCTIONS.
2. KEEP MATERIALS IN MANUFACTURER'S ORIGINAL, UNOPENED CONTAINERS AND PACKAGING UNTIL APPLICATION.
3. STORE MATERIALS IN CLEAN, DRY AREA INDOORS.
4. STORE MATERIALS OUT OF DIRECT SUNLIGHT.
5. KEEP MATERIALS FROM FREEZING.
6. PROTECT MATERIALS DURING STORAGE, HANDLING, AND APPLICATION TO PREVENT CONTAMINATION OR DAMAGE.
1.6 AMBIENT CONDITIONS
A. APPLY MATERIALS WHEN AIR AND SURFACE TEMPERATURES ARE BETWEEN 55 DEGREES F (13 DEGREES C) AND 80 DEGREES F (27 DEGREES C).
B. DO NOT APPLY MATERIALS WHEN RAIN, SNOW, OR EXCESSIVE MOISTURE IS EXPECTED DURING APPLICATION OR WITHIN 24 HOURS AFTER APPLICATION.
PART 2 PRODUCTS
2.1 MANUFACTURER
A. BRICKFORM, 11061 JERSEY BOULEVARD, RANCHO CUCAMONGA, CALIFORNIA 91730. TOLL FREE 800-483-9628. PHONE 909-484-3399. FAX 909-484-3318. WEBSITE WWW.BRICKFORM.COM. E-MAIL INFO@BRICKFORM.COM.
2.2 MATERIALS
A. CHEMICAL STAINS:
1. ACID STAIN: BRICKFORM "BLUSH-TONE ACID STAIN".
a. COLOR: MISSION BROWN.
2. REACTIVE STAIN: BRICKFORM "E-STAIN".
B. SEALER:
1. LOW-SHEEN SEALER WITH TRACTION GRIP: BRICKFORM "SAFETY-SEAL".
a. SLIP-RESISTANT, UV-RESISTANT, LACQUER-BASED, ACRYLIC, CLEAR SEALER.
b. VOC: 400 G/L.
PART 3 EXECUTION
3.1 EXAMINATION
A. EXAMINE CONCRETE SURFACES TO RECEIVE CHEMICAL STAINED CONCRETE.
B. NOTIFY ARCHITECT OF CONDITIONS THAT WOULD ADVERSELY AFFECT APPLICATION OR SUBSEQUENT USE.
C. DO NOT BEGIN PREPARATION OR APPLICATION UNTIL UNACCEPTABLE CONDITIONS ARE CORRECTED.
3.2 PREPARATION
A. PROTECTION OF IN-PLACE CONDITIONS: PROTECT ADJACENT SURFACES, AREAS, ADJOINING WALLS, AND LANDSCAPING FROM CONTACT WITH CHEMICAL STAINED CONCRETE MATERIALS.
B. SURFACE PREPARATION OF CONCRETE:
1. PREPARE CONCRETE IN ACCORDANCE WITH MANUFACTURER'S INSTRUCTIONS.
2. NEW CONCRETE: CURE CONCRETE FOR A MINIMUM OF 28 DAYS BEFORE APPLICATION OF CHEMICAL STAINS.
3. PROFILE CONCRETE TO SURFACE PROFILE IN ACCORDANCE WITH MANUFACTURER'S INSTRUCTIONS.
4. ENSURE CONCRETE IS CLEAN, SOUND, AND DRY.
5. REMOVE DIRT, DUST, DEBRIS, OIL, GREASE, SEALERS, PAINT, COATINGS, ADHESIVES, AND OTHER CONTAMINATES THAT COULD PREVENT CHEMICAL STAIN FROM PENETRATING CONCRETE SURFACE.
3.3 APPLICATION
A. APPLY CHEMICAL STAINED CONCRETE MATERIALS IN ACCORDANCE WITH MANUFACTURER'S INSTRUCTIONS AT LOCATIONS INDICATED ON THE DRAWINGS.
B. APPLY CHEMICAL STAINS TO CREATE PATTERNS, COLORS, TEXTURES, AND EFFECTS AS INDICATED ON THE DRAWINGS.
C. REMOVE CHEMICAL STAIN RESIDUE AND CLEAN SURFACE IN ACCORDANCE WITH MANUFACTURER'S INSTRUCTIONS.
D. APPROVED MOCK-UPS: MATCH APPROVED MOCK-UPS FOR PATTERNS, COLORS, TEXTURES, SEALING, SPECIAL EFFECTS, AND WORKMANSHIP.
3.4 SEALING
A. SEAL CHEMICAL STAINED CONCRETE SURFACES IN ACCORDANCE WITH MANUFACTURER'S INSTRUCTIONS.
B. APPLY SEALER UNIFORMLY OVER ENTIRE CHEMICAL STAINED CONCRETE SURFACE.
C. DO NOT ALLOW TRAFFIC ON FINISHED SEALED SURFACES FOR THE FOLLOWING PERIODS AFTER APPLICATION:
1. FOOT TRAFFIC: MINIMUM 24 HOURS.
2. VEHICULAR TRAFFIC: MINIMUM 5 DAYS.
3.5 PROTECTION
A. DO NOT APPLY TAPE TO FINISHED SEALED SURFACES.
B. INTERIOR SURFACES: PROTECT APPLIED CHEMICAL STAINED CONCRETE FROM DAMAGE DURING CONSTRUCTION.
END OF SECTION

- -DIVISION 04. MASONRY
NOT USED.

- DIVISION 05. METALS

055213 PIPE AND TUBE RAILINGS:
NOT USED.

- DIVISION 06. WOOD AND PLASTICS

061053 MISCELLANEOUS CARPENTRY:
ALL STANDARD 1X AND 2 X MATERIAL SHALL BE DOUGLAS FIR #2 OR BETTER, FB=1250PSI; FV=95 PSI; E= 1,700,000 PSI, S4S, WITH MOISTURE CONTENT OF 19% AT TIME OF DRESSING.
ANY WOOD STUDS, JOISTS, BLOCKING, BRACING, FURRING, ETC., USED SHALL BE IN ACCORDANCE WITH THE BUILDING CODES. FIRE-RETARDANT TREATED WOOD WITH IDENTIFYING LABEL IS ACCEPTABLE, IF ALLOWED BY LOCAL CODES, LANDLORD, ETC. ALL WOOD DESIGNATED TO BE FIRE RETARDANT TREATED SHALL BE PRESSURE-IMPREGNATED WITH INORGANIC SALTS TO COMPLY WITH UNDERWRITERS' LABORATORIES, INC., REQUIREMENTS FOR FLAME SPREAD OF 25 OR LESS WITH NO EVIDENCE OF SIGNIFICANT PROGRESSIVE METHOD FOR FIRE HAZARD CLASSIFICATION. ALL LUMBER 2" NOMINAL OR LESS SHALL BE DRIED TO AN AVERAGE MOISTURE CONTENT OF 18% OR LESS.

066116 SOLID SURFACE
SOLID SURFACE: NON-POROUS, HOMOGENEOUS MATERIAL MAINTAINING THE SAME COMPOSITION THROUGHOUT THE PART WITH A COMPOSITION OF ACRYLIC POLYMER, ALUMINUM TRIHYDRATE FILLER AND PIGMENT.
SOLID SURFACE BASED PRODUCTS:
PERFORMANCE/DESIGN CRITERIA:

PROPERTY	REQUIREMENT (MIN OR MAX)	TEST PROCEDURE
TENSILE STRENGTH	5400 PSI MIN	ASTM D638
TENSILE MODULUS	1.4 X 106 PSI MIN	ASTM D638
TENSILE ELONGATION	0.42% MIN.	ASTM D638
FLEXURAL STRENGTH	9200 PSI MIN	ASTM D790
FLEXURAL MODULUS	1.38 X 105 PSI MIN	ASTM D790
HARDNESS	>85-ROCKWELL	ASTM D785
THERMAL EXPANSION	3.04 X 10-5 IN./IN./°F	ASTM E228
BALL IMPACT	NO FRACTURE	NEMA LD 3,
WEATHERABILITY	ΔE*94<5 IN 1,000 HRS	ASTM G155

FUNGI AND BACTERIA, DOES NOT SUPPORT MICROBIAL GROWTH, HIGHLY RESISTANT TO MOLD GROWTH
FLAMMABILITY: CLASS 1 AND A WHEN TESTED TO UL 723.

FABRICATE COMPONENTS IN SHOP TO GREATEST EXTENT PRACTICAL TO SIZES AND SHAPES INDICATED, IN ACCORDANCE WITH APPROVED SHOP DRAWINGS AND SOLID POLYMER MANUFACTURER REQUIREMENTS. FORM JOINTS BETWEEN COMPONENTS USING MANUFACTURER'S STANDARD JOINT ADHESIVE WITHOUT CONSPICUOUS JOINTS. PROVIDE FACTORY CUTOUTS FOR PLUMBING FITTINGS AND BATH ACCESSORIES AS INDICATED ON DRAWINGS.
FABRICATE BACKSPLASHES FROM SOLID SURFACE MATERIAL.
FABRICATE JOINTS BETWEEN COMPONENTS USING MANUFACTURER'S STANDARD JOINT ADHESIVE. ENSURE JOINTS ARE INCONSPICUOUS IN APPEARANCE AND WITHOUT VOIDS. ATTACH 50 MM (2") WIDE REINFORCING STRIP OF SOLID POLYMER MATERIAL UNDER EACH JOINT.
PROVIDE HOLES AND CUTOUTS FOR PLUMBING AND ACCESSORIES INDICATED ON DRAWINGS.
ROUT AND FINISH COMPONENT EDGES TO A SMOOTH, UNIFORM FINISH. ROUT CUTOUTS, THEN SAND EDGES SMOOTH. REPAIR OR REJECT DEFECTIVE OR INACCURATE WORK.

- DIVISION 07. THERMAL AND MOISTURE PROTECTION

072100 BUILDING INSULATION:
SOUND BATT INSULATION SHALL BE EQUAL TO OWENS CORNING 3 1/2" UNFACED SOUND ATTENUATION BATTS.

DIVISION 08. OPENINGS

08111113 HOLLOW METAL DOORS AND FRAMES
INTERIOR HOLLOW METAL DOOR AND INTERIOR WINDOW FRAMES SHALL BE EQUAL TO EXISTING CECO DOOR PRODUCTS, WELDED 16GA CRS (COLD ROLLED STEEL). PROVIDE ALL DOOR FRAMES WITH STEEL REINFORCEMENT AT HINGES, LOCKSETS, CLOSERS, ETC.

PROVIDE ALL INTERIOR HOLLOW METAL WINDOW FRAMES WITH ALL NECESSARY GLAZING TAPE, SETTING BLOCKS, GASKETS, ETC. INSTALL GLASS STOPS ON THE INTERIOR SIDE OF THE WINDOW FRAME.

TYPE, PROFILE, AND JAMB DEPTH OF ALL WINDOW AND DOOR FRAMES SHALL BE AS NECESSARY TO BE COMPATIBLE WITH ADJACENT WALL CONSTRUCTION, THICKNESS, ETC. ALL HOLLOW METAL FRAMES SHALL BE SHOP PRIMED.

081416 FLUSH WOOD DOORS
WOOD DOORS SHALL BE 1-3/4" SOLID CORE AND EQUAL TO EXISTING LYNDEN DOORS, PLAIN SLICED RED OAK WITH CLEAR FACTORY FINISH. PROVIDE ADDITIONAL REINFORCEMENTS AS NECESSARY FOR CLOSERS, LOCKSETS, AND OTHER ACCESSORIES SHOWN ON SCHEDULE.

087100 HARDWARE
US26D/626 SATIN CHROME.

UNLESS OTHERWISE SPECIFIED, ALL HARDWARE SELECTIONS SHALL MATCH EXISTING. PROVIDE HARDWARE AS NOTED OR APPROVED EQUAL WHERE ALLOWED.

LOCKS/CYLINDERS:.... STANLEY BEST 9K 93K, NO SUBSTITUTIONS U.N.O.
LEVERS..... BEST 15D TRIM
STRIKES.....BEST S3
HINGES..... MATCH EX'G. STANLEY FBB179 (STANDARD) / FBB168 (HEAVY/HIGH TRAFFIC DOORS)
GASKETING..... NATIONAL GUARD PRODUCTS
STOPS AND TRIM..... HAGER
CLOSERS..... NORTON
EXIT HARDWARE/ CRASH BARS..... VON DUPRIN, NO SUBSTITUTIONS

ALL KEY-OPERATED LOCKS AND CYLINDERS SHALL BE KEYED AND MASTER KEYED, AS INDICATED ON THE DOOR SCHEDULE OR IN ACCORDANCE WITH INSTRUCTIONS FROM THE OWNER'S DESIGNATED REPRESENTATIVE.

088000 GLAZING
GLASS SHALL BE EQUAL TO PPG AND AS FURTHER DESCRIBED, BELOW:
UNLESS NOTED OTHERWISE, INTERIOR WINDOWS SHALL BE 1/4" MINIMUM THICK CLEAR GLASS UNITS EQUAL TO PPG CLEAR GLASS.

PROVIDE TEMPERED GLASS AT AREAS SUBJECT TO HUMAN IMPACT AND WHERE OTHERWISE INDICATED ON DRAWINGS.

INSTALL ALL GLASS COMPLETE WITH NECESSARY GLAZING TAPE, SETTING BLOCKS, GASKETS, ETC.

THE CONTRACTOR SHALL PROVIDE THE FOLLOWING SAMPLES, SUBMITTALS AND SHOP DRAWINGS FOR REVIEW AND APPROVAL:

SUBMITTALS:
WINDOWS AND GLAZING
DOORS AND HARDWARE.
CABINETS, HARDWARE, AND LAMINATE.
SUPPORT BRACKETS AND HARDWARE.
SOLID SURFACE MATERIAL AND COLOR SELECTION CHART.
CERAMIC TILE COLOR SELECTION CHART.
SIGNAGE.
CONCRETE STAIN

SHOP DRAWINGS:
WINDOWS AND GLAZING
CABINETS, HARDWARE, AND LAMINATE.

SAMPLES:
CERAMIC TILE AS SELECTED FROM COLOR CHART.
SOLID SURFACE AS SELECTED FROM COLOR CHART.
INTERIOR PAINTS.
WOOD DOOR FINISH.
ACOUSTIC CEILING TILE.
SIGNAGE.
CONCRETE STAIN (ON SAMPLE OF FLOOR CONCRETE)

CAIRN DESIGN LLC
leading high performance building solutions
1805 Sheely Drive
Fort Collins, CO 80526
voice: (970)-286-7968
cairndesignllc.com

STATE OF COLORADO
KATHERINE W. LIGON
404152
LICENSED ARCHITECT

PROJECT:
LOGAN COUNTY COMMUNITY CENTER ADDITION

SHEET TITLE:
ARCHITECTURAL SPECIFICATIONS AND REQUIRED SUBMITTALS

ISSUE DATE:
BID/PERMIT
12/16/2022

REVISIONS:
-
-
-
-

PROJECT NO.:
2208

SHEET NO.
A-03

As instruments of service, these drawings and the design represented are the permanent property of Cairn Design, LLC. Reproduction or use of these drawings other than for the project intended, without written consent from the Designer, is prohibited. Unauthorized use will be subject to legal action.

084113 - ALUMINUM-FRAMED WINDOWS AND STOREFRONTS
SEE ENVELOPE DRAWINGS.

- DIVISION 09. FINISHES

092216 NON-LOAD BEARING STEEL FRAMING
INTERIOR PARTITIONS SHALL BE CONSTRUCTED AS NOTED OR SCHEDULED ON DRAWINGS. METAL STUDS SHALL BE EQUAL TO U.S. GYPSUM (USG) 20 GAGE "C" SHAPE UP TO 12' IN LENGTH. CONSULT MANUFACTURER'S TABLES FOR LENGTHS EXCEEDING 12'. METAL STUDS SHALL BE GALVANIZED.

092900 GYPSUM BOARD:
GYPSUM BOARD SHALL BE EQUAL TO GOLD BOND BRAND, HI-ABUSE XP GYPSUM BOARD AS MANUFACTURED BY NATIONAL GYPSUM CO. THICKNESS SHALL BE 5/8" UNLESS OTHERWISE INDICATED. SHEET SIZE SHALL BE 4' WIDE X MAXIMUM LENGTH AVAILABLE WHICH WILL MINIMIZE THE NUMBER OF END JOINTS. ACCESSORIES, MOULDS, BEADS, TAPE, ETC., SHALL BE PROVIDED AND INSTALLATION SHALL BE IN ACCORDANCE WITH GA 216 AND ASTM C-36. INSTALL J-MOULD WHERE WALL BOARD ABUTS DISSIMILAR MATERIALS.

PROVIDE 48" HIGH, 1-1/2" PLASTIC CORNER GUARDS WITH RETAINERS AND END CAPS ON ALL OUTSIDE CORNERS.

095113 ACOUSTICAL PANEL CEILINGS:
ACOUSTICAL CEILING SYSTEMS SHALL MATCH EXISTING AND BE FIRE RATED. CEILING TILES SHALL BE 24" x 24" TILES IN A STANDARD T-BAR SUSPENSION SYSTEM. SUSPENSION SYSTEM FOR CEILING SHALL BE HOT DIPPED GALVANIZED STEEL BODY AND MATCH EXISTING. UNLESS NOTED OTHERWISE, EXPOSED SURFACES OF ALL CEILING GRIDS SHALL BE WHITE.

096513 RESILIENT WALL BASE AND ACCESSORIES:
OWNER-PROVIDED AND INSTALLED.

096813 CARPET:
OWNER-PROVIDED AND INSTALLED.

099123 INTERIOR PAINTING:
PAINTING OF SURFACES SHALL BE AS LISTED BELOW AND, UNLESS NOTED OTHERWISE, PRODUCTS SHALL MATCH EXISTING. PREPARATION AND APPLICATION SHALL BE IN ACCORDANCE WITH THE MANUFACTURER'S SPECIFICATIONS AND RECOMMENDATIONS.

INTERIOR GYPSUM BOARD SHALL BE PAINTED AS FOLLOWS:
PRIME COAT ..... LATEX PRIMER
FINISH..... (2) COATS LATEX
WALLS - SATIN, EQUAL TO OLYMPIC C16-2, GLAZED PEAR
CEILINGS/BULKHEADS - FLAT, EQUAL TO OLYMPIC C12-4, AUDUBON-WILLOW TREE

STAINED WOOD SHALL MATCH EXISTING AND BE FINISHED AS FOLLOWS:
STAIN..... MINWAX INTERIOR OIL STAIN
FINISH..... MINWAX POLYURETHANE FINISH

INTERIOR HOLLOW METAL FRAMES AND MISCELLANEOUS METAL SHALL BE PAINTED AS FOLLOWS:
PRIME COAT ..... DTM ACRYLIC PRIMER/ FINISH (IF NOT FACTORY PRIMED)
FINISH..... (2) COATS ACRYLIC; SEMI-GLOSS, EQUAL TO GENERAL PAINT RACCOON 3176 / SHERWIN-WILLIAMS MIX: ULTRADEEP
W1-2(OZ)+6(32), B1-(OZ)+19(32), R2-7(32)+1(64)+1(128), Y3-31(32)+1(128)

EXTERIOR DOORS AND FRAMES SHALL BE PREPARED, PRIMED AND PAINTED PER MANUFACTURER'S INSTRUCTIONS.

ALL INTERIOR PAINT COLORS SHALL BE AS INDICATED ON PLANS OR ARE TO BE SELECTED BY THE OWNER'S DESIGNATED REPRESENTATIVE.

- DIVISION 10. SPECIALTIES

101600 TOILET COMPARTMENTS:
CONTRACTOR MUST VERIFY EXISTING CONDITIONS BEFORE STARTING WORK. IF ANY EXISTING CONDITIONS PREVENT COMPLETION OF WORK AS REQUIRED HEREIN, CONTACT ARCHITECT FOR DESIGN MODIFICATION.

SUBJECT TO COMPLIANCE WITH PROJECT REQUIREMENTS, THE FOLLOWING MANUFACTURERS' ASSEMBLIES ARE ACCEPTABLE: BRADLEY, ASI GLOBAL PARTITIONS, SCRANTON, OR EQUIVALENT. INSTALL TOILET COMPARTMENTS PER MANUFACTURER'S INSTRUCTIONS.

COMPARTMENTS TO BE FLOOR-MOUNTED ONLY. ACCESSIBLE COMPARTMENTS TO PROVIDE OUTSWINGING DOORS WITH CLEAR OPENING OF 32". OTHER DOORS TO SWING IN WITH 24" CLEAR OPENING.

PANELS TO BE SOLID PLASTIC HDPE, MINIMUM 15 YEAR WARRANTY. ALL FINISHED STEEL PARTITION COMPONENTS TO BE FACTORY FINISHED WITH PRIMER AND BAKED ENAMEL, OR POWDER-COATED. DOORS AND PARTITIONS TO BE 1" THICK; PILASTERS 1-1/4" THICK. STEEL TO BE GALVANIZED AND NOT LESS THAN THE FOLLOWING GAUGES: PARTITIONS, 22 GA; PILASTERS, 20 GA; AND DOORS, 22 GA. FINISH COLOR TO BE SELECTED BY OWNER FROM MANUFACTURER'S STANDARD COLORS.

DIMENSIONS: BOTTOM OF PANELS AND DOORS: 1'-0" ABOVE FINISHED FLOOR. TOPS OF PANELS, DOORS, AND PILASTER: 5'-10" A.F.F.

PROVIDE ONE EACH OF CHROME-PLATED CAST ALLOY COAT HOOK, BUMPER, AND LATCH WITH STOP AND KEEPER.

ANCHORAGE DEVICES TO BE RUST-INHIBITIVE.

102830 GRAB BARS:
GRAB BAR SHALL BE TYPE-304 STAINLESS STEEL WITH SATIN-FINISH. GRAB BAR SHALL HAVE 18-GAUGE (1.2MM) WALL THICKNESS AND 1-1/2" (38MM) OUTSIDE DIAMETER.

CLEARANCE BETWEEN THE GRAB BAR AND WALL SHALL BE 1-1/2" (38MM). CONCEALED MOUNTING FLANGES SHALL BE 11-GAUGE (3.2MM) THICK STAINLESS STEEL PLATE, 2" X 3-1/8" (50 X 80MM), AND EQUIPPED WITH AT LEAST TWO SCREW HOLES FOR ATTACHMENT TO WALL. FLANGE COVERS SHALL BE 22 GAUGE (0.8MM), 3-1/4" (85MM) DIAMETER X 1/2" (13MM) DEEP, AND SHALL SNAP OVER MOUNTING FLANGE TO CONCEAL MOUNTING SCREWS AND/OR WINGIT FASTENERS. ENDS OF GRAB BAR SHALL PASS THROUGH CONCEALED MOUNTING FLANGES AND BE HELIARC WELDED TO FORM ONE STRUCTURAL UNIT. GRAB BAR SHALL COMPLY WITH ACCESSIBLE DESIGN (INCLUDING ADAAG IN THE U.S.A.) FOR STRUCTURAL STRENGTH.

PROVIDE CONCEALED ANCHOR DEVICE OR BACKING AS REQUIRED IN ACCORDANCE WITH LOCAL BUILDING CODES BEFORE WALL IS FINISHED. FASTEN CONCEALED MOUNTING FLANGES TO ANCHOR DEVICE OR BACKING WITH AT LEAST TWO SCREWS OPPOSING EACH OTHER IN EACH FLANGE. SNAP FLANGE COVERS OVER EACH MOUNTING FLANGE TO CONCEAL MOUNTING SCREWS. CONCEALED ANCHOR DEVICES AND MOUNTING SCREWS ARE NOT INCLUDED WITH BOBRICK GRAB BARS AND MUST BE SPECIFIED AS AN ACCESSORY.

102226 OPERABLE PARTITIONS

PART 1 - GENERAL
1.01 DESCRIPTION
A. GENERAL
1. FURNISH AND INSTALL OPERABLE PARTITIONS AND SUSPENSION SYSTEM. PROVIDE ALL LABOR, MATERIALS, TOOLS, EQUIPMENT, AND SERVICES FOR OPERABLE WALLS IN ACCORDANCE WITH PROVISIONS OF CONTRACT DOCUMENTS.
1.02 RELATED WORK BY OTHERS
A. PREPARATION OF OPENING WILL BE BY GENERAL CONTRACTOR. ANY DEVIATION OF SITE CONDITIONS CONTRARY TO APPROVED SHOP DRAWINGS MUST BE CALLED TO THE ATTENTION OF THE ARCHITECT.
B. ALL HEADER, BLOCKING, SUPPORT STRUCTURES, JAMBS, TRACK ENCLOSURES, SURROUNDING INSULATION, AND SOUND BAFFLES AS REQUIRED IN 1.04 QUALITY ASSURANCE.
C. PREPUNCHING OF SUPPORT STRUCTURE IN ACCORDANCE WITH APPROVED SHOP DRAWINGS.
D. PAINT OR OTHERWISE FINISHING ALL TRIM AND OTHER MATERIALS ADJOINING HEAD AND JAMB OF OPERABLE PARTITIONS.
1.03 SUBMITTALS
A. COMPLETE SHOP DRAWINGS ARE TO BE PROVIDED PRIOR TO FABRICATION INDICATING CONSTRUCTION AND INSTALLATION DETAILS. SHOP DRAWINGS MUST BE SUBMITTED WITHIN 60 DAYS AFTER RECEIPT OF SIGNED CONTRACT.
1.04 QUALITY ASSURANCE
A. PREPARATION OF THE OPENING SHALL CONFORM TO THE CRITERIA SET FORTH PER ASTM E557 STANDARD PRACTICE FOR ARCHITECTURAL APPLICATION AND INSTALLATION OF OPERABLE PARTITIONS
B. THE PARTITION STC (SOUND TRANSMISSION CLASSIFICATION) SHALL BE ACHIEVED PER THE STANDARD TEST METHODS ASTM E90.
C. NOISE ISOLATION CLASSIFICATIONS SHALL BE ACHIEVED PER THE STANDARD TEST METHODS ASTM E336 AND ASTM E413.
D. NOISE REDUCTION COEFFICIENT (NRC) RATINGS SHALL BE PER ASTM C423.
E. RACK TESTING FOR 10 YEARS. (TENSIONAL STRENGTH STRESS TEST)
F. THE MANUFACTURER SHALL HAVE A QUALITY SYSTEM THAT IS REGISTERED TO THE ISO 9001 STANDARDS.
1.05 PRODUCT DELIVERY, STORAGE, AND HANDLING
A. PROPER STORAGE OF PARTITIONS BEFORE INSTALLATION AND CONTINUED PROTECTION DURING AND AFTER INSTALLATION WILL BE THE RESPONSIBILITY OF THE GENERAL CONTRACTOR.
1.06 WARRANTY
A. PARTITION SYSTEM SHALL BE GUARANTEED FOR A PERIOD OF TWO YEARS AGAINST DEFECTS IN MATERIAL AND WORKMANSHIP, EXCLUDING ABUSE.

PART 2 PRODUCTS
2.01 ACCEPTABLE MANUFACTURERS
A. UPON COMPLIANCE WITH ALL OF THE CRITERIA SPECIFIED IN THIS SECTION, MANUFACTURERS WISHING TO BID PRODUCTS EQUAL TO THE PRODUCT SPECIFIED MUST SUBMIT TO THE ARCHITECT 10 DAYS PRIOR TO BIDDING COMPLETE DATA IN SUPPORT OF COMPLIANCE AND A LIST OF THREE PAST INSTALLATIONS OF PRODUCTS SIMILAR TO THOSE LISTED. THE SUBMITTING MANUFACTURER GUARANTEES THE PROPOSED SUBSTITUTED PRODUCT COMPLIES WITH THE PERFORMANCE ITEMS SPECIFIED AND AS DETAILED ON THE DRAWINGS.
2.02 MATERIALS
A. PRODUCT TO BE TOP SUPPORTED PAIRED PANELS.
1. PANELS SHALL BE NOMINALLY 4" [102] THICK, TO 48" [1219] IN WIDTH, AND HINGED IN PAIRS.
2. PANEL FACES SHALL BE LAMINATED TO APPROPRIATE SUBSTRATE TO MEET THE STC REQUIREMENT IN 2.04 ACOUSTICAL PERFORMANCE.
3. FRAMES SHALL BE OF 16 GAUGE [1.42MM] PAINTED STEEL WITH INTEGRAL FACTORY APPLIED ALUMINUM VERTICAL EDGE AND FACE PROTECTION.
4. VERTICAL SOUND SEALS SHALL BE OF TONGUE AND GROOVE CONFIGURATION, ENSURE PANEL-TO-PANEL ALIGNMENT AND PREVENT SOUND LEAKS BETWEEN PANELS.
5. HORIZONTAL TOP SEALS SHALL BE RETRACTABLE, PROVIDE 1" [25] NOMINAL OPERATING CLEARANCE, AND EXERT UPWARD FORCE WHEN EXTENDED. ALL PANELS, INCLUDING PASS DOOR PANELS AND LEVER CLOSURE PANELS MUST HAVE RETRACTABLE TOP AND BOTTOM SEALS.
6. HORIZONTAL BOTTOM SEALS SHALL BE RETRACTABLE, PROVIDE UP TO 2" [51] NOMINAL OPERATING CLEARANCE, AND EXERT DOWNWARD FORCE WHEN FULLY EXTENDED.
7. HORIZONTAL TRIM SHALL BE OF ALUMINUM.
8. LOW PROFILE HINGES ON BASIC PANELS SHALL BE OF STEEL AND PROJECT NO MORE THAN 1/4" [6] BEYOND PANEL FACES. EACH PAIR OF PANELS TO HAVE A MINIMUM OF THREE HINGES.
B. WEIGHT OF THE PANELS SHALL BE 7.8-13.6 LBS./SQ. FT. [37.8-66.4 KG/SQ.M] BASED ON OPTIONS SELECTED.
C. SUSPENSION SYSTEM:
1. TRACK SHALL BE OF CLEAR ANODIZED ARCHITECTURAL GRADE EXTRUDED ALUMINUM ALLOY 6063-T6. TRACK DESIGN SHALL PROVIDE PRECISE ALIGNMENT AT THE TROLLEY RUNNING SURFACES AND PROVIDE INTEGRAL SUPPORT FOR ADJOINING CEILING, SOFFIT, OR PLENUM SOUND BARRIER. TRACK SHALL BE CONNECTED TO THE STRUCTURAL SUPPORT BY PAIRS OF MINIMUM 3/8" [10] DIA. THREADED STEEL HANGER RODS. GUIDE RAILS AND/OR TRACK SWEEP SEALS SHALL NOT BE REQUIRED.
a. EACH PANEL SHALL BE SUPPORTED BY ONE 4-WHEELED CARRIER. WHEELS TO BE OF HARDENED STEEL BALL BEARINGS ENCASED WITH MOLDED POLYMER TIRES.
2. PLENUM CLOSURE (BY OTHERS): DESIGN OF PLENUM CLOSURE MUST PERMIT LIFTING OUT OF HEADER PANELS TO ADJUST TRACK HEIGHT. PLENUM CLOSURE REQUIRED FOR OPTIMUM SOUND CONTROL OF PARTITION.
3. OPTION: THE PANELS SHALL BE SUPPORTED BY A PRE-ENGINEERED TRUSS AND POST SYSTEM FABRICATED OF STEEL AND ALUMINUM DESIGNED BY THE MANUFACTURER. THE TRUSS IS ATTACHED TO THE BUILDING STRUCTURE FOR LATERAL SUPPORT ONLY. THE LOAD OF THE TRUSS AND PARTITION IS SUPPORTED BY END COLUMNS. THE COLUMNS ARE CONNECTED TO FLOOR PLATES THAT DISTRIBUTE THE LOAD OF THE SYSTEM AT THE FLOOR.
D. FINISHES
1. FACE FINISH SHALL BE: (SELECT AS REQUIRED):
a. FACTORY APPLIED REINFORCED VINYL FABRIC WITH WOVEN BACKING, WEIGHING NOT LESS THAN 20 OZ. PER LINEAL YARD [620 G/M]. COLOR SHALL BE SELECTED FROM MANUFACTURER'S STANDARD COLOR SELECTOR.
2. EXPOSED METAL TRIM AND SEAL COLOR SHALL BE SELECTED FROM MANUFACTURER'S STANDARD COLOR SELECTOR.
3. ALUMINUM TRACK SHALL BE CLEAR ANODIZED

2.03 OPERATION
A. PANELS SHALL BE MANUALLY MOVED FROM THE STORAGE AREA, POSITIONED IN THE OPENING, AND SEALS SET.
B. RETRACTABLE HORIZONTAL SEALS
1. RETRACTABLE HORIZONTAL SEALS SHALL BE ACTIVATED BY A REMOVABLE QUICK-SET OPERATING HANDLE LOCATED APPROXIMATELY 42" [1067] FROM THE FLOOR IN THE PANEL EDGE.
2. ALL RETRACTABLE SEALS IN EACH HINGED PANEL GROUP SHALL BE OPERATED SIMULTANEOUSLY.
3. SEAL ACTIVATION REQUIRES A 190 DEGREE TURN OF THE REMOVABLE HANDLE.
C. FINAL PARTITION CLOSURE TO BE BY LEVER CLOSURE PANEL WITH EXPANDING JAMB WHICH COMPENSATES FOR MINOR WALL IRREGULARITIES AND PROVIDES A MINIMUM OF 250 LBS. [113.4 KG] SEAL FORCE AGAINST THE ADJACENT WALL FOR OPTIMUM SOUND CONTROL. THE JAMB ACTIVATOR SHALL BE LOCATED APPROXIMATELY 45" [1143] FROM THE FLOOR IN THE PANEL FACE AND BE ACCESSED FROM EITHER SIDE OF THE PANEL. THE JAMB IS EQUIPPED WITH A MECHANICAL RACK AND PINION GEAR DRIVE MECHANISM AND SHALL EXTEND 4"-6" [102-152] BY TURNING THE REMOVABLE OPERATING HANDLE.
D. STACK/STORE PANELS
1. RETRACT SEALS WITH REMOVABLE OPERATING HANDLE AND MOVE TO STORAGE AREA. PANELS MAY BE STORED AT EITHER OR BOTH ENDS OF THE TRACK OR IN A POCKET.
2.04 ACOUSTICAL PERFORMANCE
A. ACOUSTICAL PERFORMANCE SHALL BE TESTED AT A LABORATORY ACCREDITED UNDER THE NATIONAL VOLUNTARY LABORATORY ACCREDITATION PROGRAM (NVLAP) AND IN ACCORDANCE WITH ASTM E90 TEST STANDARDS. STANDARD PANEL CONSTRUCTION SHALL HAVE OBTAINED AN STC RATING OF 47.

PART 3 - EXECUTION
A. INSTALLATION. THE COMPLETE INSTALLATION OF THE OPERABLE WALL SYSTEM SHALL BE BY AN AUTHORIZED FACTORY-TRAINED INSTALLER AND BE IN STRICT ACCORDANCE WITH THE APPROVED SHOP DRAWINGS AND MANUFACTURER'S STANDARD PRINTED SPECIFICATIONS, INSTRUCTIONS, AND RECOMMENDATIONS.
B. CLEANING
1. ALL TRACK AND PANEL SURFACES SHALL BE WIPED CLEAN AND FREE OF HANDPRINTS, GREASE, AND SOIL.
2. CARTONING AND OTHER INSTALLATION DEBRIS SHALL BE REMOVED TO ONSITE WASTE COLLECTION AREA, PROVIDED BY OTHERS.
C. TRAINING
1. INSTALLER SHALL DEMONSTRATE PROPER OPERATION AND MAINTENANCE PROCEDURES TO OWNER'S REPRESENTATIVE.
2. OPERATING HANDLE AND OWNERS MANUALS SHALL BE PROVIDED TO OWNER'S REPRESENTATIVE.

- DIVISION 11 EQUIPMENT; DIVISION 12 FURNISHINGS; DIVISION 13 SPECIAL CONSTRUCTION; DIVISION 14 CONVEYING SYSTEMS; DIVISION 21 FIRE PROTECTION; DIVISION 22 PLUMBING:

NOT USED.

- DIVISION 23 HEATING, VENTILATING & AIR-CONDITIONING

SEE MECHANICAL SHEETS.

- DIVISION 26 ELECTRICAL

SEE ELECTRICAL SHEETS.

- DIVISION 32. EXTERIOR IMPROVEMENTS

NOT USED.

CAIRN DESIGN LLC
leading high performance building solutions
1805 Sheely Drive
Fort Collins, CO 80526
voice: (970)-286-7968
cairndesignllc.com

STATE OF COLORADO
KATHERINE W. LIGON
404152
LICENSED ARCHITECT

PROJECT:
LOGAN COUNTY COMMUNITY CENTER ADDITION

SHEET TITLE:
ARCHITECTURAL SPECS.

-

ISSUE DATE:
BID/PERMIT
12/16/2022

REVISIONS:
-
-
-
-

PROJECT NO.:
2208

SHEET NO.
A-04

As instruments of service, these drawings and the design represented are the permanent property of Cairn Design, LLC. Reproduction or use of these drawings other than for the project intended, without written consent from the Designer, is prohibited. Unauthorized use will be subject to legal action.

SECTION 13 34 19
METAL BUILDING SYSTEMS

PART 1 - GENERAL
1.1 SUMMARY
A. SECTION INCLUDES:
1. PRE_ENGINEERED METAL BUILDING.
1.2 APPLICABLE PUBLICATIONS
A. COMPLY WITH REFERENCES TO EXTENT SPECIFIED IN THIS SECTION.
B. ASTM INTERNATIONAL (ASTM):
A36/A36M_19 CARBON STRUCTURAL STEEL
A242/A242M_13(2018) HIGH_STRENGTH LOW_ALLOY STRUCTURAL STEEL.
A653/A653M_20 STEEL SHEET, ZINC_COATED (GALVANIZED) OR ZINC_IRON_ALLOY_COATED (GALVANNEALED) BY THE HOT_DIP PROCESS
A992/A992M_11(2015) STRUCTURAL STEEL SHAPES
A1008/A1008M_18 STEEL, SHEET, COLD ROLLED, CARBON, STRUCTURAL, HIGH_STRENGTH LOW_ALLOY
A1011/A1011M_18A STEEL, SHEET AND STRIP, HOT_ROLLED, CARBON, STRUCTURAL, HIGH_STRENGTH LOW_ALLOY, HIGH_STRENGTH LOW_ALLOY WITH IMPROVED FORMABILITY, AND ULTRA_HIGH STRENGTH
B117_19 OPERATING SALT SPRAY (FOG) APPARATUS
B209_14 ALUMINUM AND ALUMINUM_ALLOY SHEET AND PLATE
B209M_14 ALUMINUM AND ALUMINUM_ALLOY SHEET AND PLATE (METRIC)
C553_13(2019) MINERAL FIBER BLANKET THERMAL INSULATION FOR COMMERCIAL AND INSULATION FOR COMMERCIAL AND INDUSTRIAL APPLICATIONS
C1036_16 FLAT GLASS
C1104/C1104M_19 DETERMINING THE WATER VAPOR SORPTION OF UNFACED MINERAL FIBER INSULATION
D522/D522M_17 MANDREL BEND TEST OF ATTACHED ORGANIC COATINGS
D2244_16 CALCULATION OF COLOR TOLERANCES AND COLOR DIFFERENCES FROM INSTRUMENTALLY MEASURED COLOR COORDINATES
D2794_93(2019) RESISTANCE OF ORGANIC COATINGS TO THE EFFECTS OF RAPID DEFORMATION (IMPACT)
D3359_17 MEASURING ADHESION BY TAPE TEST
D4214_07(2015) EVALUATING THE DEGREE OF CHALKING OF EXTERIOR PAINT FILMS
G153_13 OPERATING ENCLOSED CARBON ARC LIGHT APPARATUS FOR EXPOSURE OF NONMETALLIC MATERIALS
C. METAL BUILDING MANUFACTURERS ASSOCIATION (MBMA):
RECOMMENDED GUIDE SPECIFICATIONS FOR PRE_ENGINEERED METAL BUILDINGS
RECOMMENDED DESIGN PRACTICES MANUAL
D. AMERICAN INSTITUTE OF STEEL CONSTRUCTION (AISC):
360_16 SPECIFICATIONS FOR STRUCTURAL STEEL BUILDINGS
E. NATIONAL FIRE PROTECTION ASSOCIATION (NFPA):
220_18 STANDARD TYPES OF BUILDING CONSTRUCTION.
F. AMERICAN WELDING SOCIETY (AWS):
D1.1/D1.1M_20 STRUCTURAL WELDING CODE_STEEL
G. AMERICAN IRON AND STEEL INSTITUTE (AISI): COLD FORMED STEEL DESIGN MANUAL LATEST EDITION.

1.3 SUBMITTALS
A. SUBMITTAL PROCEDURES: SHOP DRAWINGS, PRODUCT DATA, AND SAMPLES.
B. SUBMITTAL DRAWINGS:
1. SHOW SIZE, CONFIGURATION, AND FABRICATION AND INSTALLATION DETAILS.
2. INCLUDE ERECTION DRAWINGS AND ERECTION MANUALS SHOWING COMPLETE ERECTION LAYOUTS.
3. SHOW STEEL FRAMING LOCATION, PANEL LENGTHS AND MARKINGS, AND OTHER COMPONENT PARTS CORRESPONDING WITH ERECTION SEQUENCE AND PROCEDURES.
4. SHOW CONNECTIONS WITH ADJOINING WORK.
5. SHOW ANCHOR BOLT PLACEMENTS AND COLUMN REACTIONS.
6. SHOW ALL BRACING LOCATIONS.
C. MANUFACTURER'S LITERATURE AND DATA:
1. DESCRIPTION OF EACH PRODUCT.
a. METAL PANELS.
b. INSULATION.
c. SEALING MATERIALS.
2. INSTALLATION INSTRUCTIONS.
3. WARRANTY.
D. SAMPLES:
1. WALL AND ROOF PANELS, 300 MM (12 INCH) WIDE BY 300 MM (12 INCH) HIGH SECTIONS, WITH FACTORY FINISH IN SPECIFIED COLORS.
2. FASTENERS FOR WALL AND ROOF PANELS.
E. CERTIFICATES: CERTIFY PRODUCTS COMPLY WITH SPECIFICATIONS.
1. ZINC COATING ON STEEL PANELS IS THE SPECIFIED THICKNESS.
2. THERMAL VALUES OF ROOF AND WALL PANELS WITH INSULATION MEET SPECIFIED REQUIREMENTS.
3. INDICATING MANUFACTURERS AND INSTALLERS MEET QUALIFICATIONS SPECIFIED.
F. QUALIFICATIONS: SUBSTANTIATE QUALIFICATIONS COMPLY WITH SPECIFICATIONS.
1. MANUFACTURER WITH PROJECT EXPERIENCE LIST.
G. DELEGATED DESIGN DRAWINGS AND CALCULATIONS: SIGNED AND SEALED BY DELEGATED PROFESSIONAL STRUCTURAL ENGINEER REGISTERED IN THE STATE OF THE PROJECT.
1. INCLUDE COMPLETE STRUCTURAL DESIGN ANALYSIS FOR STRUCTURAL COMPONENTS INCLUDING BUT NOT LIMITED COMPUTER MODEL INPUT AND OUTPUT AND APPLICABLE LOAD TABLES.
2. INCLUDE MANUFACTURER LOAD TABLES INDICATING SELECTED PANEL MATERIAL, CONFIGURATION AND THICKNESS MEETS DESIGN REQUIREMENTS FOR SPANS SHOWN.
H. OPERATION AND MAINTENANCE DATA:
1. CARE INSTRUCTIONS FOR EACH EXPOSED FINISH PRODUCT.

1.4 QUALITY ASSURANCE
A. MANUFACTURER QUALIFICATIONS:
1. REGULARLY MANUFACTURES SPECIFIED PRODUCTS.
2. MANUFACTURED SPECIFIED PRODUCTS WITH SATISFACTORY SERVICE ON FIVE SIMILAR INSTALLATIONS FOR MINIMUM FIVE YEARS.
1.5 DELIVERY
A. DELIVER PRODUCTS IN MANUFACTURER'S ORIGINAL SEALED PACKAGING.
B. MARK PACKAGING, LEGIBLY. INDICATE MANUFACTURER'S NAME OR BRAND, TYPE, PRODUCTION RUN NUMBER, AND MANUFACTURE DATE.
1.6 STORAGE AND PROTECTION
A. STACK MATERIALS STORED ON SITE BEFORE ERECTION, COVERED WITH SUITABLE WEATHER TIGHT COVERING. STORE METAL PANELS SO THAT ANY ACCUMULATED WATER WILL DRAIN OFF. DO NOT STORE PANELS IN CONTACT WITH MATERIALS THAT MIGHT CAUSE STAINING. MATERIALS HAVING DEFECTS OR DAMAGES THAT EFFECT APPEARANCE, SERVICEABILITY OR USE WILL BE REJECTED.
1.7 WARRANTY
A. MANUFACTURER'S WARRANTY: WARRANT PRE_ENGINEERED METAL BUILDING AGAINST MATERIAL AND MANUFACTURING DEFECTS AND WEATHER INTRUSION.
1. WARRANTY PERIOD: TWO YEARS.
PART 2 - PRODUCTS
2.1 SYSTEM DESCRIPTION
A. BUILDING ENCLOSURE SYSTEM CONSISTING OF STEEL FRAMING, METAL ROOF AND WALL PANELS, INSULATION, AND OTHER INTEGRATED PRODUCTS SPECIFIED IN THIS SECTION, CAPABLE OF MEETING SPECIFIED LOADS AND THERMAL CRITERIA.
2.2 SYSTEM PERFORMANCE
A. DELEGATED DESIGN: PREPARE SUBMITTAL DOCUMENTS INCLUDING DESIGN CALCULATIONS AND DRAWINGS SIGNED AND SEALED BY REGISTERED DESIGN PROFESSIONAL, LICENSED IN STATE WHERE WORK IS LOCATED.
B. DESIGN METAL BUILDINGS COMPLYING WITH SPECIFIED PERFORMANCE:
1. LOAD RESISTANCE: MBMA METAL BUILDING SYSTEMS MANUAL; ASCE 7 ; DESIGN CRITERIA AS INDICATED ON DRAWINGS.
a. WIND UPLIFT: PER SITE LOCATION.
b. MAXIMUM DEFLECTION PER ANTICIPATED LOADING.
2.3 MATERIALS
A. STEEL FRAMING AND STRUCTURAL STEEL MEMBERS: ASTM A36 OR A242.
B. STRUCTURAL STEEL SHAPES: ASTM A992.
C. UNCOATED STEEL FOR LIGHT GAGE MEMBERS: ASTM A1008 OR ASTM A1011.
D. PANELS:
1. SHEET STEEL: ASTM A653/A653M, G40 ZINC COATING, GALVANIZED LIGHT GAGE STEEL OF SPECIFIED THICKNESS.
E. JOINT SEALANT: SEALANT TYPE AS RECOMMEND BY MANUFACTURER APPROPRIATE FOR EACH TYPE OF APPLICATION.
F. SEALING TAPE: MANUFACTURER'S STANDARD IN COLOR TO MATCH METAL BUILDING PANELS.
G. SEMI RIGID INSULATION: MINERAL FIBERBOARD, ASTM C553, TYPE 2, FACED WITH A VAPOR BARRIER HAVING A MAXIMUM PERM RATING OF 0.5.
H. BLANKET INSULATION: UNFACED BLANKET INSULATION, ASTM C553, TYPE 1 AND 2 HAVING A WATER VAPOR ABSORPTION RATING LESS THAN 0.2 PERCENT BY VOLUME OR 5 PERCENT BY WEIGHT, ASTM C1104.

2.4 FABRICATION
A. GENERAL: COORDINATE FABRICATION AND ERECTION OF WORK WITH RELATED WORK OF OTHER TRADES. PROVIDE CUTOUTS AND SUPPLEMENTAL REINFORCEMENT AS REQUIRED TO ACCOMMODATE MATERIALS AND WORK SPECIFIED IN OTHER SECTIONS OF THE SPECIFICATIONS.
B. PROTECTION OF DISSIMILAR METALS: SEPARATE DISSIMILAR MATERIALS NOT COMPATIBLE WITH ADJOINING MATERIALS WHEN EXPOSED TO MOISTURE BY MEANS OF COATINGS, GASKETS, OR OTHER EFFECTIVE MEANS.
C. STEEL FRAMEWORK FABRICATION:
1. COORDINATE STEEL FRAMING REQUIRED FOR PRE_ENGINEERED METAL BUILDING WITH STRUCTURAL STEEL SHOWN ON DRAWINGS. SHOP FABRICATE COLUMNS AND RELATED COMPONENTS COMPLETE WITH CONNECTION HOLES FOR ATTACHMENT OF PRIMARY AND SECONDARY FRAMING MEMBERS AND BRACING.
2. FRAMING, PURLINS, GIRTS, STRUTS AND MISCELLANEOUS STEEL MEMBERS REQUIRED FOR ATTACHMENT OF PRE_ENGINEERED METAL BUILDING PANELS TO BUILDING STRUCTURE TO BE ROLL FORMED MEMBERS COMPLYING WITH ASTM A1008/A1008M. DESIGN, SIZE, SPACE AND INSTALL MEMBERS TO MEET JOB AND LOADING CONDITIONS. FACTORY_PUNCH MEMBERS WITH HOLES AND FURNISHED COMPLETE WITH ANGLE CLIPS AND FASTENINGS REQUIRED FOR ATTACHING TO STRUCTURE.
3. BOLTED CONNECTIONS: RIBBED OR HIGH_TENSILE STEEL BOLTS AS APPROPRIATE FOR EACH CONNECTION.
D. WALL PANELS: INSULATING CORE ENCLOSED BETWEEN TWO METAL FACE SHEETS.
1. STEEL FACE SHEETS: 0.07MM / 24 GAGE THICK.
E. ROOF PANELS: 0.04 MM / 24 GAGE THICK.
F. DESIGN ROOF PANELS WITH GRADE OF STEEL AND CONFIGURATION OF CROSS SECTION CAPABLE OF WITHSTANDING DESIGN LOAD CONDITIONS WITHOUT EXCEEDING SPECIFIED STRESS AND DEFLECTION LIMITATIONS, WITH SAME SUPPORT CONFIGURATION AS THAT IN PROPOSED BUILDING. APPLY SHEETS WITH MINIMUM SIDE LAP OF MINIMUM ONE FULL CONFIGURATION. EXPOSED INSULATION FOR INSTALLATION ON INSIDE FACE OF ROOF PANELS SHALL BE SEMI RIGID INSULATION.
G. FLASHING, TRIM AND CLOSURES: SAME MATERIAL, GAGE AND FINISH AS ADJACENT WALL AND ROOF PANELS. FASTENINGS AS SPECIFIED FOR WALL AND ROOF PANELS. FORM OR MOLD CLOSURE STRIPS TO MATCH CONFIGURATION OF THE ROOFING OR SIDING. INSTALL CLOSURES WHEREVER NECESSARY TO INSURE WEATHER TIGHT CONSTRUCTION.
H. LOUVERS: FABRICATE WALL LOUVERS TRIM OF SAME MATERIAL, GAGE AND FINISH AS FACE SHEETS FOR WALL PANELS. DESIGN LOUVER ASSEMBLY TO PREVENT INFILTRATION OF WATER INTO BUILDING. PROVIDE INSECT SCREENS AND WIRE GUARDS ON WALL LOUVERS EXCEPT OMIT INSECT SCREENS ON LOUVERS CONNECTED TO EXHAUST DUCTS.
I. DOORS AND FRAMES: PROVIDE DOOR AND FRAME OPENINGS PER DRAWINGS.
J. WINDOWS: PROVIDE WINDOW AND FRAME OPENINGS PER DRAWINGS.
2.5 FACTORY FINISH AND PAINTING
A. FACTORY FINISH WALL AND ROOF PANELS, INCLUDING RELATED COMPONENTS, ACCESSORIES AND FASTENINGS, AS FOLLOWS:
1. PRIME COAT WEATHER FACES OF WALL AND ROOF PANELS, AND RELATED COMPONENTS WITH EPOXY PRIMER, AND A FINISH COAT OF POLYVINYLIDENE FLUORIDE BAKED ON COATING THICKNESS OF (0.8_1.3 MILS) WITH THE FOLLOWING PERFORMANCE CHARACTERISTICS.
a. SALT SPRAY TEST: ASTM B 117, MINIMUM // (500) // (1000) // HOURS. UNDERCUTTING OF PAINT FILM FROM SCORE LINE NOT TO EXCEED 2 MM (1/16 INCH).
b. ACCELERATED WEATHERING TEST: ASTM G 153, METHOD 2, TYPE D APPARATUS MINIMUM 2000 HOURS OR TYPE EH APPARATUS MINIMUM 500 HOURS, NO CHECKING, BLISTERING OR LOSS OF ADHESION; COLOR CHANGE LESS THAN 5 NBS UNITS BY ASTM D 2244 AND CHALKING LESS THAN NO. 8 RATING BY ASTM D 4214.
c. FLEXIBILITY: ASTM D 522, METHOD A, 3 MM 1/8-INCH DIAMETER, 180 DEGREE BEND, NO EVIDENCE OF FRACTURING TO THE NAKED EYE.
d. ADHESION: ASTM D 3359, METHOD B, FOR LABORATORY TEST AND FILM THICKNESS LESS THAN 0.01 MM 5 MIL AND METHOD A FOR SITE TESTS. IMPACT: ASTM D 2794, NO LOSS OF ADHESION AFTER DIRECT AND REVERSE IMPACT EQUAL TO 1.5 TIMES METAL THICKNESS IN MM MILS, EXPRESSED IN M_KG INCH_POUNDS.
2. FINISH ON EXPOSED FACE OF LINER PANEL, OFF WHITE BAKED ENAMEL SUITABLE AS FINISHED SURFACE OR AS BASE FOR FIELD PAINTING.
B. STEEL FRAMING MEMBERS: ONE COAT OF SHOP PAINT.
C. DOORS FRAMES, AND OTHER SIMILAR COMPONENTS: BONDERIZED AND ONE PRIME COAT OF BAKED_ON SHOP PAINT, THEN FACTORY APPLIED FINISH COAT.
D. WINDOWS AND LOUVERS: FACTORY FINISH TO MATCH ADJACENT WALL PANELS.
E. FIELD PAINT ALL EXTERIOR EXPOSED FASTENINGS TO MATCH ADJACENT PANELS.
F. WIRE BRUSH ABRADED SURFACES AND TOUCH UP WITH SAME MATERIALS AS SHOP PRIME OR FINISH COAT OF PAINT.
PART 3 - EXECUTION
3.1 DELIVERY
A. THE MANUFACTURER OF THE BUILDING SHALL INCLUDE DELIVERY AND UNLOADING TO THE SITE ADDRESS SHOWN ON THE DRAWINGS. THE OWNER WILL PROVIDE A LOCATION ACCESSIBLE BY TRACTOR TRAILER AND OF SUFFICIENT SIZE TO ACCOMMODATE UNLOADING AND STORAGE.

THE CONTRACTOR SHALL PROVIDE THE FOLLOWING SAMPLES, SUBMITTALS AND SHOP DRAWINGS FOR REVIEW AND APPROVAL:

SUBMITTALS:
BUILDING SIDING, ROOF AND TRIM COLOR SELECTION CHART.

SHOP DRAWINGS:
ENGINEERED BUILDING DRAWINGS, ERECTION DETAILS AND REACTIONS.

SAMPLES:
BUILDING SIDING, ROOF AND TRIM AS SELECTED FROM COLOR CHART.

CAIRN DESIGN LLC
leading high performance building solutions
1805 Sheely Drive
Fort Collins, CO 80526
voice: (970)-286-7968
cairndesignllc.com

STATE OF COLORADO
KATHERINE W. LIGON
404152
LICENSED ARCHITECT

PROJECT:
LOGAN COUNTY COMMUNITY CENTER ADDITION

SHEET TITLE:
METAL BUILDING SPECIFICATIONS AND REQUIRED SUBMITTALS

ISSUE DATE:
BID/PERMIT
12/16/2022

REVISIONS:
-
-
-
-

PROJECT NO.:
2208

SHEET NO.
A-05

As instruments of service, these drawings and the design represented are the permanent property of Cairn Design, LLC. Reproduction or use of these drawings other than for the project intended, without written consent from the Designer, is prohibited. Unauthorized use will be subject to legal action.

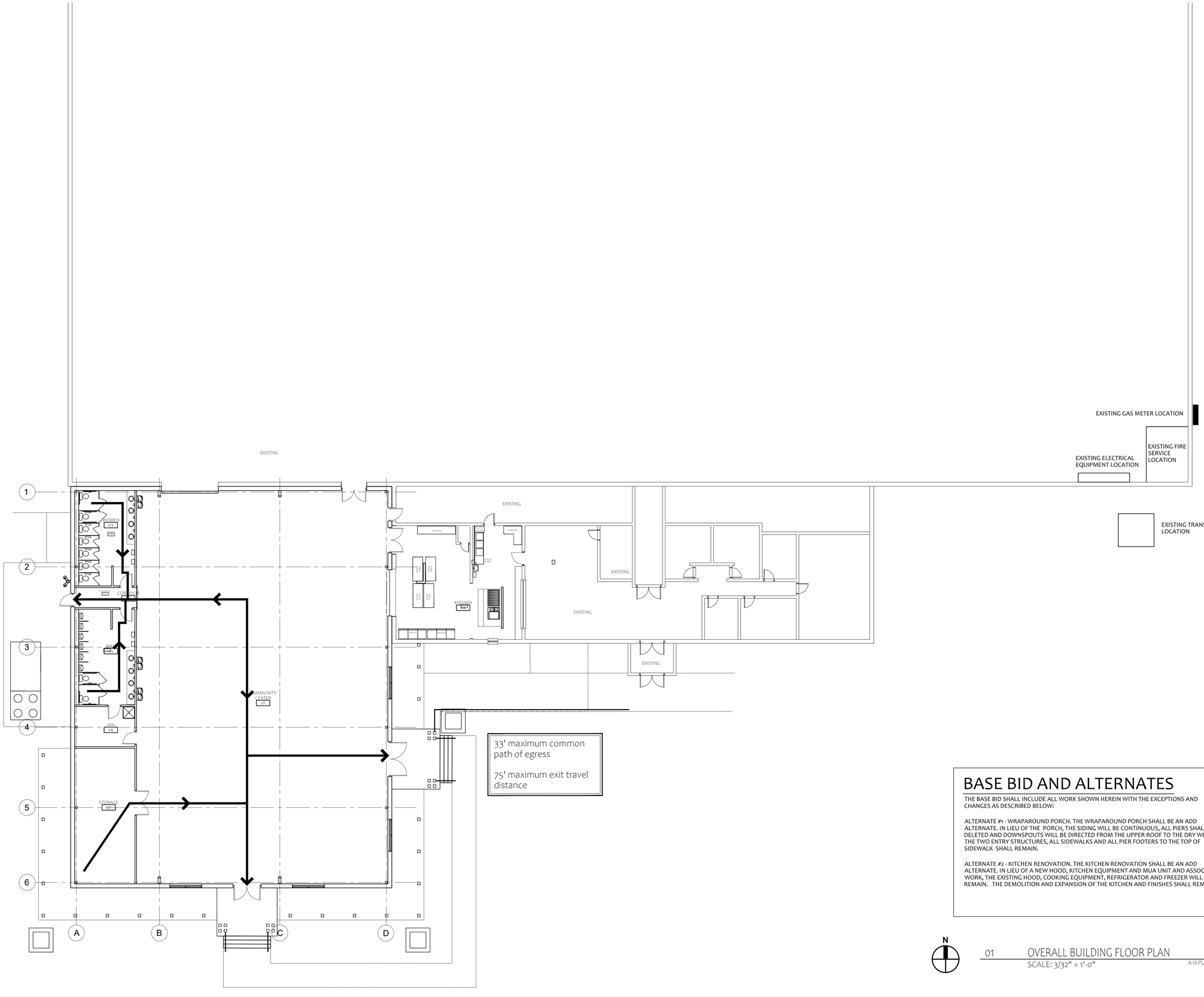

BASE BID AND ALTERNATES

THE BASE BID SHALL INCLUDE ALL WORK SHOWN HEREIN WITH THE EXCEPTIONS AND CHANGES AS DESCRIBED BELOW:

ALTERNATE #1 - WRAPAROUND PORCH. THE WRAPAROUND PORCH SHALL BE AN ADD ALTERNATE. IN LIEU OF THE PORCH, THE SIDING WILL BE CONTINUOUS, ALL PIERS SHALL BE DELETED AND DOWNSPOUTS WILL BE DIRECTED FROM THE UPPER ROOF TO THE DRY WELLS. THE TWO ENTRY STRUCTURES, ALL SIDEWALKS AND ALL PIER FOOTERS TO THE TOP OF SIDEWALK SHALL REMAIN.

ALTERNATE #2 - KITCHEN RENOVATION. THE KITCHEN RENOVATION SHALL BE AN ADD ALTERNATE. IN LIEU OF A NEW HOOD, KITCHEN EQUIPMENT AND MUA UNIT AND ASSOCIATED WORK, THE EXISTING HOOD, COOKING EQUIPMENT, REFRIGERATOR AND FREEZER WILL REMAIN. THE DEMOLITION AND EXPANSION OF THE KITCHEN AND FINISHES SHALL REMAIN.

N

01 OVERALL BUILDING FLOOR PLAN
SCALE: 3/32" = 1'-0"
A-1X.PLANS_2208

CAIRN DESIGN LLC
leading high performance building solutions

1805 Sheely Drive
Fort Collins, CO 80526

voice: (970)-286-7968

cairndesignllc.com

STATE OF COLORADO
KATHERINE V. LIGON
404152
LICENSED ARCHITECT

PROJECT:

LOGAN COUNTY COMMUNITY CENTER ADDITION

SHEET TITLE:

OVERALL BUILDING PLAN

-

ISSUE DATE:

BID/PERMIT
12/16/2022

REVISIONS:

-
-
-
-

PROJECT NO.:
2208

SHEET NO.

A-06

As instruments of service, these drawings and the design represented are the permanent property of Cairn Design, LLC. Reproduction or use of these drawings other than for the project intended, without written consent from the Designer, is prohibited. Unauthorized use will be subject to legal action.

KEYED PLAN NOTES:

1. NEW EXTERIOR WATER FOUNTAIN. SEE PLUMBING DRAWINGS.
2. NEW ELECTRIC WATER COOLER. SEE PLUMBING DRAWINGS.
3. INSTALL SALVAGED SIDING TO PATCH AREA WHERE BRICK WAS REMOVED. PROVIDE BLOCKING AS REQUIRED. REPLACE ANY MISSING INSULATION AND VAPOR BARRIER.
4. NEW BARN DOORS TO COVER ROLL UP DOOR. SEE DETAILS.
5. NEW 3' X 7' SLIDING BARN DOORS WITH TRACK AND HARDWARE.
6. NEW COMPLIANT HANDRAIL. HANDRAIL SHALL BE MANUFACTURED AND INSTALLED AFTER FINAL GRADE AND FFE IS DETERMINED. PAINT TO MATCH EXISTING GUARD RAILS.
7. NEW COMPLIANT GUARD RAIL. PROVIDE GUARDRAIL TO MATCH NEW HANDRAIL AT STAIRS. TOP OF RAIL SHALL BE 42" ABOVE SIDEWALK. PAINT TO MATCH EXISTING GUARD RAILS.
8. PROVIDE NEW SOLID SURFACE COUNTERTOP AT KITCHEN PASS THROUGH.

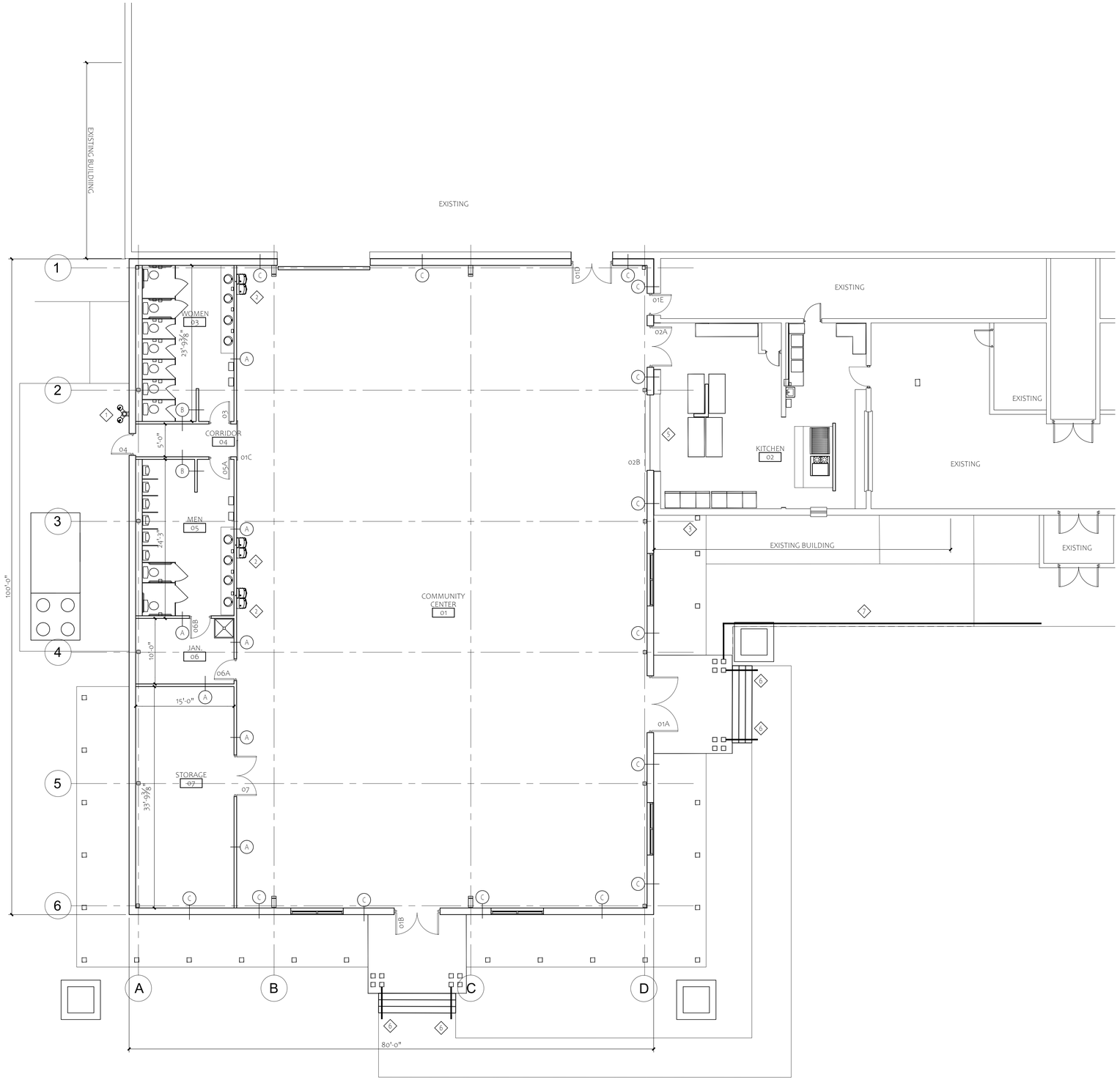

N

01 FLOOR PLAN
SCALE: 1/8" = 1'-0"

A-IX-PLANS_2208

CAIRN DESIGN LLC
leading high performance building solutions

1805 Sheely Drive
Fort Collins, CO 80526

voice: (970)-286-7968

cairndesignllc.com

STATE OF COLORADO
KATHERINE V. LIGON
404152
LICENSED ARCHITECT

PROJECT:

LOGAN COUNTY COMMUNITY CENTER ADDITION

SHEET TITLE:

FIRST FLOOR PLAN

-

ISSUE DATE:

BID/PERMIT
12/16/2022

REVISIONS:

-
-
-
-

PROJECT NO.:
2208

SHEET NO.

A-10

As instruments of service, these drawings and the design represented are the permanent property of Cairn Design, LLC. Reproduction or use of these drawings other than for the project intended, without written consent from the Designer, is prohibited. Unauthorized use will be subject to legal action.

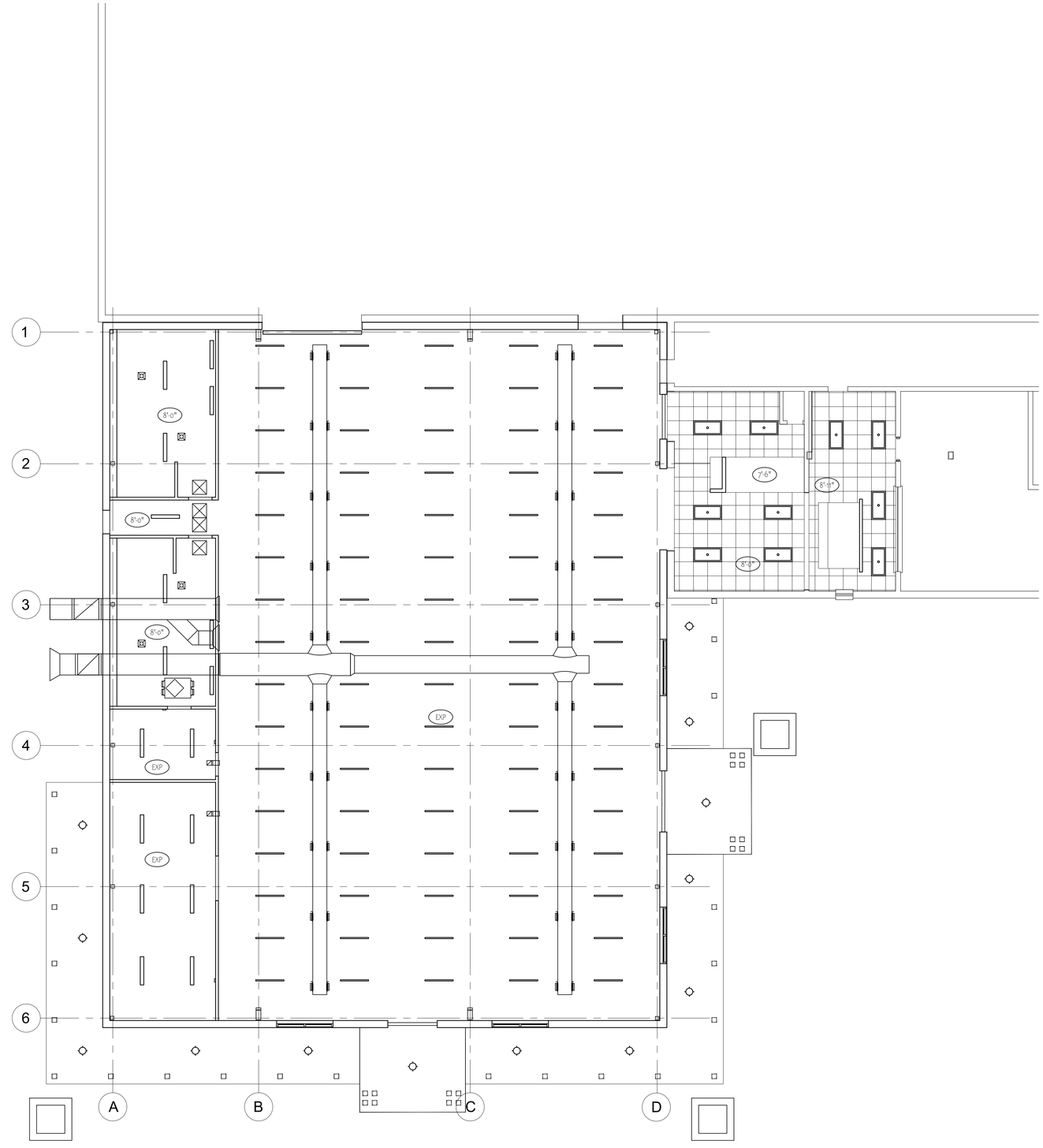

01 CEILING PLAN
SCALE: 1/8" = 1'-0"

A-1X-PLANS_2208

N

CAIRN DESIGN LLC
leading high performance building solutions

1805 Sheely Drive
Fort Collins, CO 80526

voice: (970)-286-7968

cairndesignllc.com

STATE OF COLORADO
KATHERINE V. LIGON
404152
LICENSED ARCHITECT

PROJECT:

LOGAN COUNTY
COMMUNITY CENTER
ADDITION

SHEET TITLE:

FIRST FLOOR
CEILING PLAN &
CEILING DETAILS
-

ISSUE DATE:

BID/PERMIT
12/16/2022

REVISIONS:

-
-
-

PROJECT NO.:
2208

SHEET NO.

A-11

As instruments of service, these drawings and the design represented are the permanent property of Cairn Design, LLC. Reproduction or use of these drawings other than for the project intended, without written consent from the Designer, is prohibited. Unauthorized use will be subject to legal action.

GENERAL DEMOLITION NOTES:

A. AFTER DEMOLITION OF REQUIRED EXISTING INTERIOR PARTITIONS, CONTRACTOR SHALL PATCH AND REPAIR SURFACES WITH COMPATIBLE MATERIAL, MATCHING COLOR OF EXISTING, TO LEAVE AS FINISHED SURFACE.

B. CUT AND PATCH OR REMOVE AND REPLACE EXISTING CEILING THROUGHOUT AS REQUIRED FOR NEW CONSTRUCTION.

C. REMOVE ALL DEVICES, CABINETS, FIXTURES, ETC. FROM ALL WALLS AND CEILINGS TO BE DEMOLISHED.

DEMO NOTES: X

1. REMOVE EXISTING BOLLARDS.
2. REMOVE EXISTING DOWNSPOUT.
3. REMOVE EXISTING EXTERIOR DOOR, HARDWARE AND HINGES.
4. REMOVE ALL FLOOR COVERINGS, MASTIC, THINSET, ETC AND CEILINGS IN KITCHEN AND RESTROOM.
5. REMOVE ALL EXISTING WALLS INDICATED WITH A DASHED LINE, TYPICAL.
6. REMOVE ALL EXISTING DOORS SHOWN WITH A DASHED LINE, TYPICAL. RETURN HARDWARE TO OWNER.
7. REMOVE EXISTING RESTROOM ROOM, INCLUDING ALL FIXTURES, DASHED WALLS, FLOORING, ETC. DOMESTIC WATER PIPING SHALL BE REMOVED BACK TO THE FIRST ACTIVE LINE AND CAPPED. LEAVE NO DEAD END LINES.
8. CUT OPENING IN EXISTING EXTERIOR WALL AS REQUIRED FOR NEW PASSAGE. SEE FLOOR PLAN. FINSIHED OPENING SHALL BE 6'-4" MINIMUM.
9. CUT OPENING IN EXISTING EXTERIOR WALL FOR PASS THRU AND ROLLING DOOR.
10. SAW CUT EXISTING BRICK VENEER AT EDGE OF NEW BUILDING.
11. REMOVE EXISTING KITCHEN EQUIPMENT, HOOD, CABINETS SINKS AND COUNTERTOP SHOWN AS DASHED.
12. REMOVE EXISTING WALL PANELS, DRYWALL, STUDS, ETC AS REQUIRED FOR INSTALLATION OF NEW BUILDING ADDITION COMPONENTS.
13. REMOVE EXISTING SIDING AS REQUIRED FOR INSTALLATION OF NEW BUILDING ADDITION. SALVAGE SIDING TO PATCH CORNER OF EXISTING BUILDING WHERE THE BRICK IS BEING REMOVED.

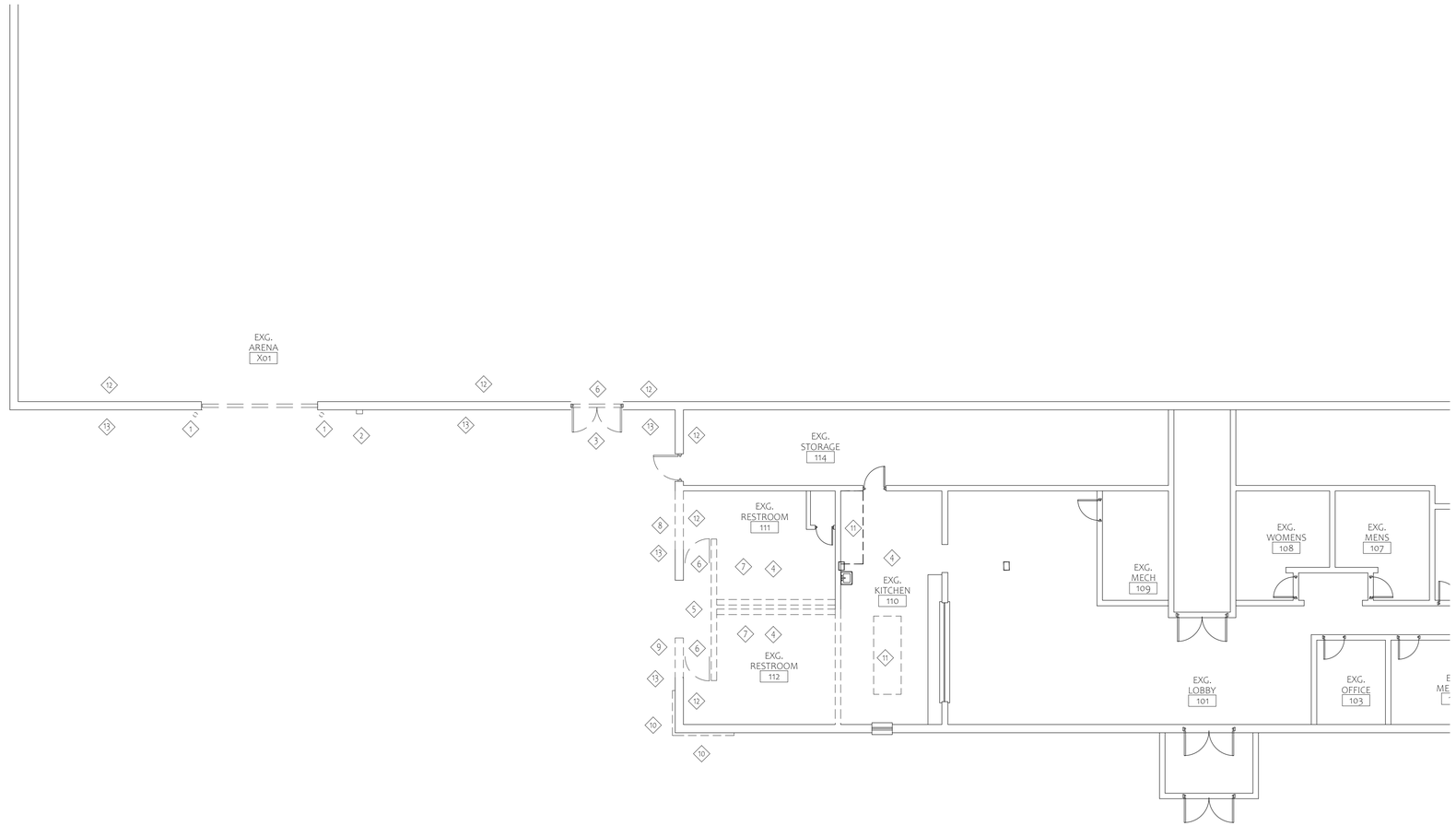

N

01 FLOOR PLAN - DEMOLITION
SCALE: 1/8" = 1'-0"

A-1X:PLANS_2208

CAIRN DESIGN LLC
leading high performance building solutions

1805 Sheely Drive
Fort Collins, CO 80526

voice: (970)-286-7968

cairndesignllc.com

STATE OF COLORADO
KATHERINE V. LIGON
404152
LICENSED ARCHITECT

PROJECT:

LOGAN COUNTY COMMUNITY CENTER ADDITION

SHEET TITLE:

FIRST FLOOR DEMO PLAN

-

ISSUE DATE:

BID/PERMIT
12/16/2022

REVISIONS:

-
-
-
-

PROJECT NO.:
2208

SHEET NO.

A-12

As instruments of service, these drawings and the design represented are the permanent property of Cairn Design, LLC. Reproduction or use of these drawings other than for the project intended, without written consent from the Designer, is prohibited. Unauthorized use will be subject to legal action.

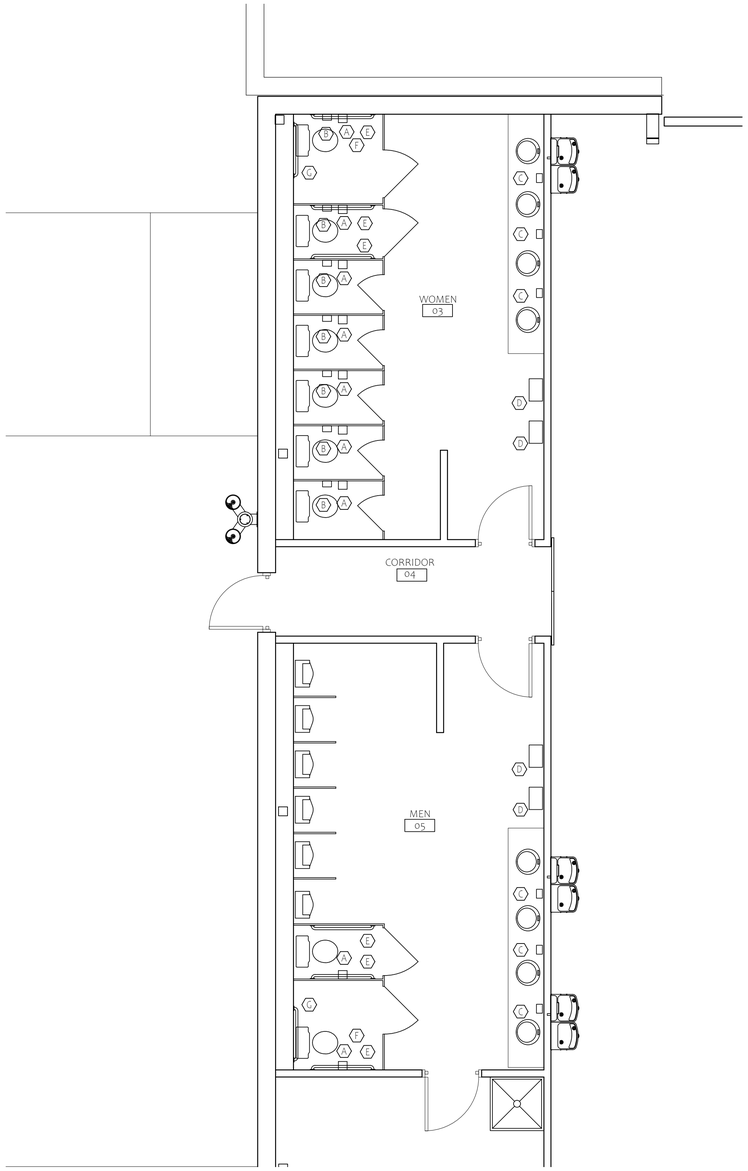

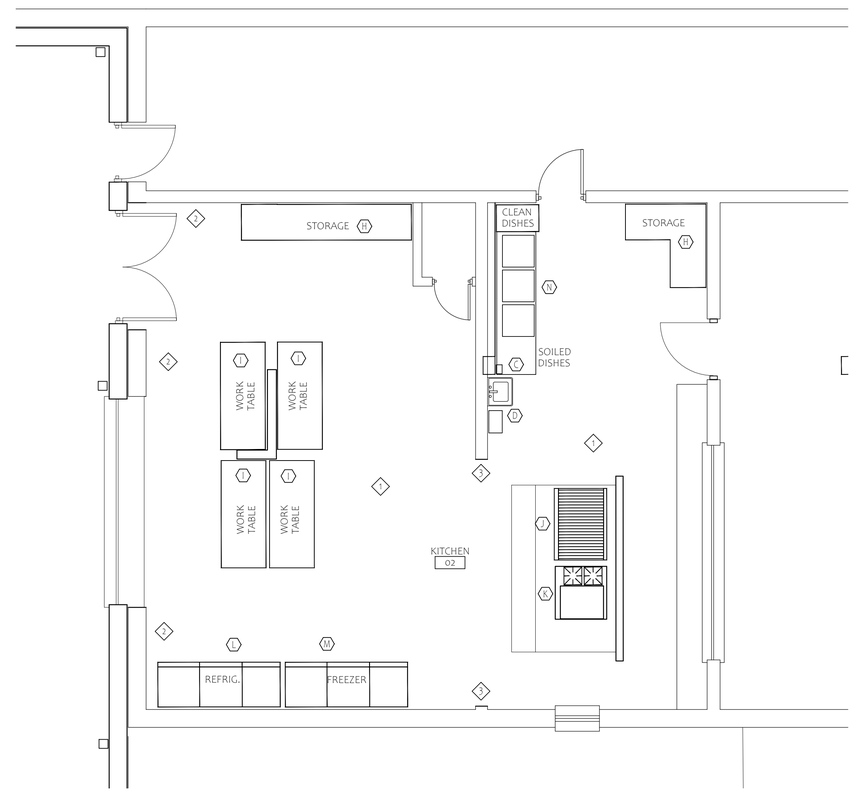

ACCESSORIES SCHEDULE

A-DT-001

TYPE	MODEL NO. *	DESCRIPTION	CONTROLS/MTG. HGHT.
A	BY OWNER	TOILET TISSUE DISPENSER	CONTROLS @ 17" MIN. A.F.F.
B	B-270	SURFACE MOUNTED SANITARY NAPKIN DISPOSAL	CONTROLS @ 17" MIN. A.F.F.
C	BY OWNER	LIQUID SOAP DISPENSER	CONTROLS @ 44" A.F.F.
D	BY OWNER	SURF. MNTED BATTERY POWERED PAPER TOWEL DISP.	CONTROLS @ 44" A.F.F.
E	B-6806-X	42" GRAB BAR OFFSET 12" FROM WALL	TOP @ 33"-36" A.F.F.
F	B-6806-X	18" VERTICAL GRAB BAR	BOTTOM @ 39"-41" A.F.F.
G	B-6806-X	36" GRAB BAR OFFSET 6" FROM WALL	TOP @ 33"-36" A.F.F.
H	BY OWNER	STORAGE SHELVES	
I	EMPURA SWT3072	72" X 30" 16GA. STAINLESS STEEL WORK TABLE	
J	STAR 848RCBB W/STAND	48" GAS CHARBROILER	
K	EMPURA EGR36-G24-NAT	36" GAS RANGE WITH OVEN	
L	EVEREST EBR3	3 SECTION REFRIGERATOR	
M	EVEREST EBF3	3 SECTION FREEZER	
N	ADVANCE TABCO 94-83-60-24	3 COMPARTMENT SINK	
X	X	X	

NOTES:
COORDINATE INSTALLATION OF FIXTURES AND ACCESSORIES WITH ADA, BUILDING CODE REQUIREMENTS, AND REQUIREMENTS OF TOILET PARTITION INSTALLATION, WHERE PROVIDED.

CONTRACTOR TO PROVIDE CONCEALED ANCHOR KITS AS REQUIRED FOR WALL CONSTRUCTION TYPE FOR ALL GRAB BARS, PARTITIONS, AND ACCESSORIES.

PROVIDE 1-1/2" MIN. CLEARANCE BETWEEN GRAB BAR AND ANY PROTRUDING ACCESSORY BELOW IT. PROVIDE MIN. 12" BETWEEN GRAB BAR AND ANY PROTRUDING ACCESSORY ABOVE IT.

* MODEL NUMBERS TAKEN FROM BOBRICK, KOHLER, AND DELTA CATALOGS, U.N.O.. PROVIDE SAME OR EQUIVALENT.

KEYED PLAN NOTES:

1. PATCH, LEVEL AND SMOOTH CONCRETE SLAB AFTER DEMOLITION AND INSTALLATION OF PLUMBING.
2. INSTALL NEW WALL STUDS AS REQUIRED AND INSTALL NEW 5/8" HIGH IMPACT DRYWALL.
3. PROVIDE AND INSTALL METAL CASEMENT ON CONCRETE BLOCK WALL AFTER DEMOLITION.

N

01 ENARGED PLANS
SCALE: 1/4" = 1'-0"

A-1X-PLANS_2208

CAIRN DESIGN LLC
leading high performance building solutions
1805 Sheely Drive
Fort Collins, CO 80526
voice: (970)-286-7968
cairndesignllc.com

STATE OF COLORADO
KATHERINE V. LIGON
404152
LICENSED ARCHITECT

PROJECT:

LOGAN COUNTY COMMUNITY CENTER ADDITION

SHEET TITLE:

ENLARGED PLANS

-

ISSUE DATE:

BID/PERMIT
12/16/2022

REVISIONS:

-
-
-
-

PROJECT NO.:
2208

SHEET NO.

A-13

As instruments of service, these drawings and the design represented are the permanent property of Cairn Design, LLC. Reproduction or use of these drawings other than for the project intended, without written consent from the Designer, is prohibited. Unauthorized use will be subject to legal action.

KEYED PLAN NOTES:

1. EXISTING SIDEWALK TO BE REMOVED.
2. NEW SIDEWALK TO EXISTING ENTRY AT ELEVATION 3930.86.
3. NEW STEPS TO MAIN ENTRY.
4. NEW SIDEWALK TO SIDE ENTRY. SLOPE TO ELEVATION 3930.86.
5. NEW HVAC UNITS ON A CONCRETE PAD.

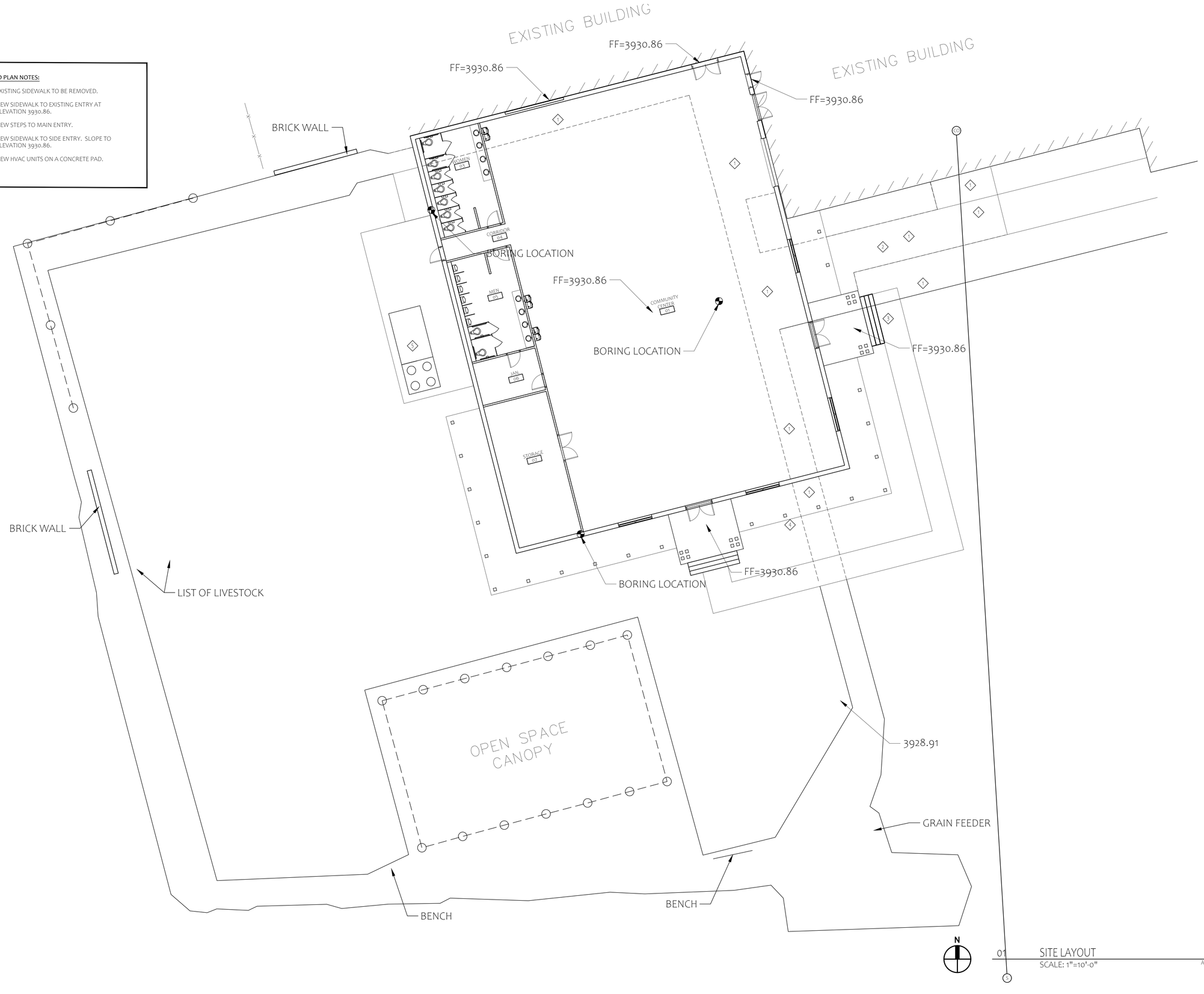

01 SITE LAYOUT
SCALE: 1"=10'-0"

A-1X-PLANS_2208

CAIRN DESIGN LLC
leading high performance building solutions

1805 Sheely Drive
Fort Collins, CO 80526

voice: (970)-286-7968

cairndesignllc.com

STATE OF COLORADO
KATHERINE V. LIGON
404152
LICENSED ARCHITECT

PROJECT:

LOGAN COUNTY COMMUNITY CENTER ADDITION

SHEET TITLE:

ARCHITECTURAL SITE LAYOUT

-

ISSUE DATE:

BID/PERMIT
12/16/2022

REVISIONS:

-
-
-
-

PROJECT NO.:
2208

SHEET NO.

A-21

As instruments of service, these drawings and the design represented are the permanent property of Cairn Design, LLC. Reproduction or use of these drawings other than for the project intended, without written consent from the Designer, is prohibited. Unauthorized use will be subject to legal action.

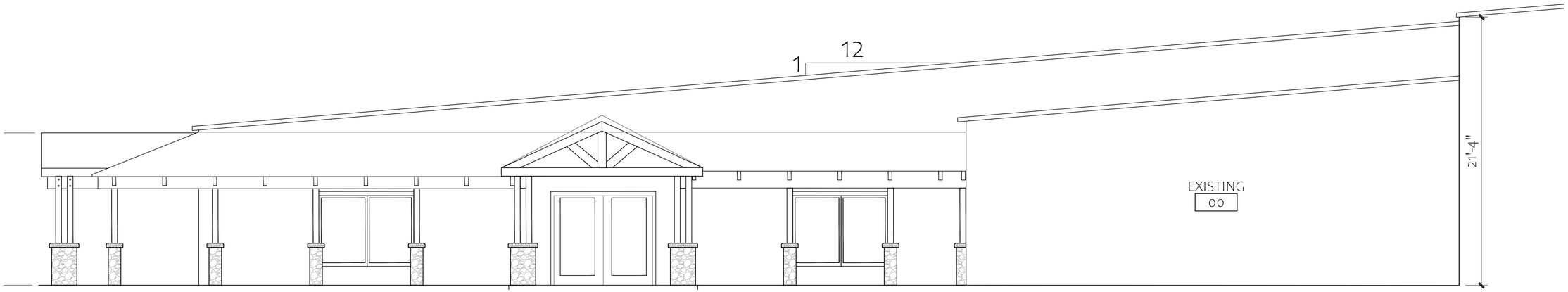

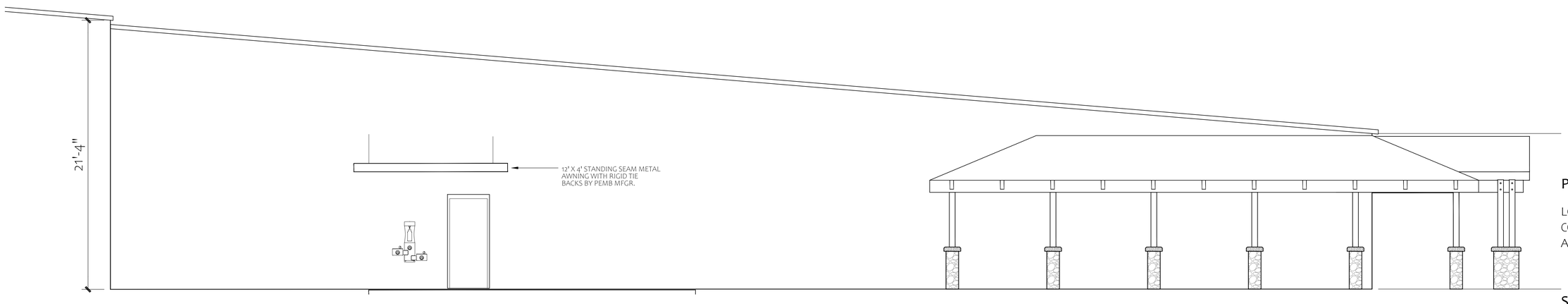

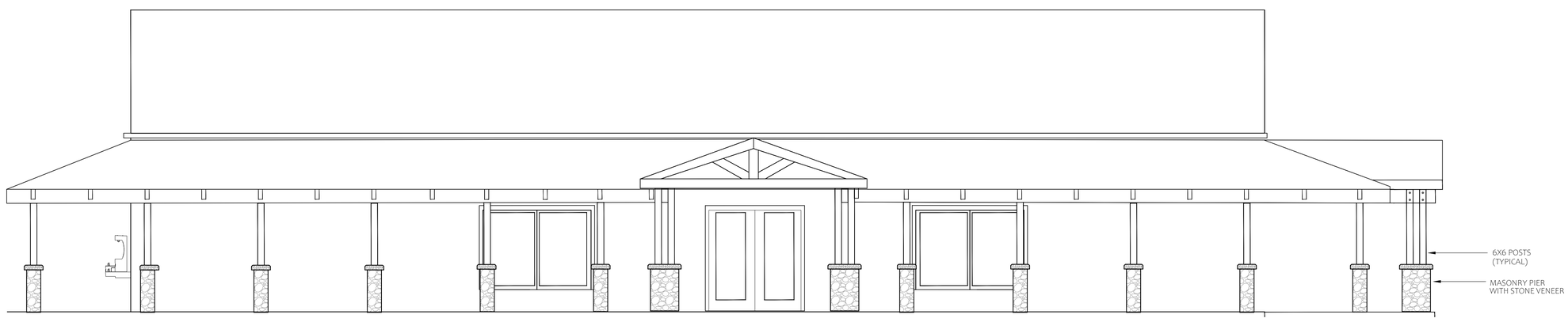

N

01 BUILDING ELEVATIONS
SCALE: 1/4"=1'-0"

A-1X-PLANS_2208

CAIRN DESIGN LLC
leading high performance building solutions

1805 Sheely Drive
Fort Collins, CO 80526

voice: (970)-286-7968

cairndesignllc.com

STATE OF COLORADO
KATHERINE V. LIGON
404152
LICENSED ARCHITECT

PROJECT:

LOGAN COUNTY
COMMUNITY CENTER
ADDITION

SHEET TITLE:

BUILDING
ELEVATIONS

-

ISSUE DATE:

BID/PERMIT
12/16/2022

REVISIONS:

-
-
-
-

PROJECT NO.:
2208

SHEET NO.

A-31

As instruments of service, these drawings and the design represented are the permanent property of Cairn Design, LLC. Reproduction or use of these drawings other than for the project intended, without written consent from the Designer, is prohibited. Unauthorized use will be subject to legal action.

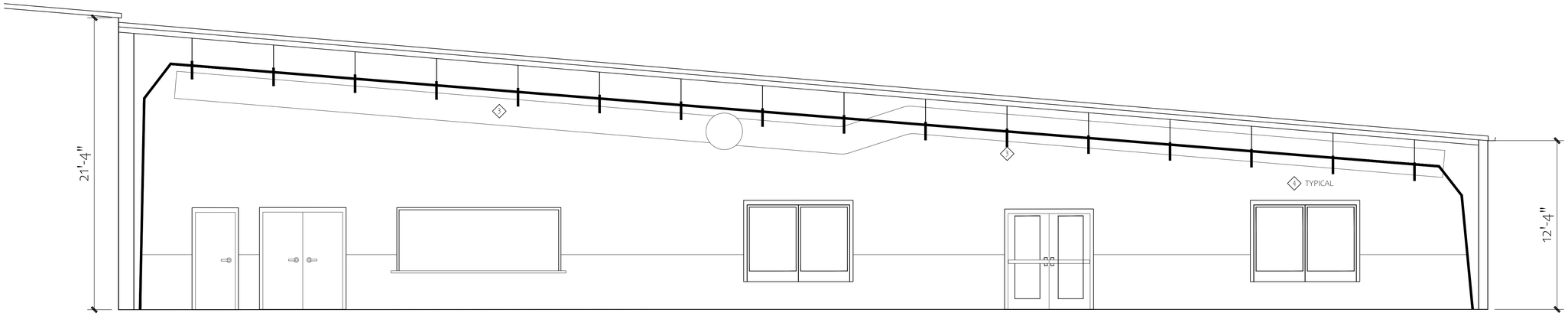

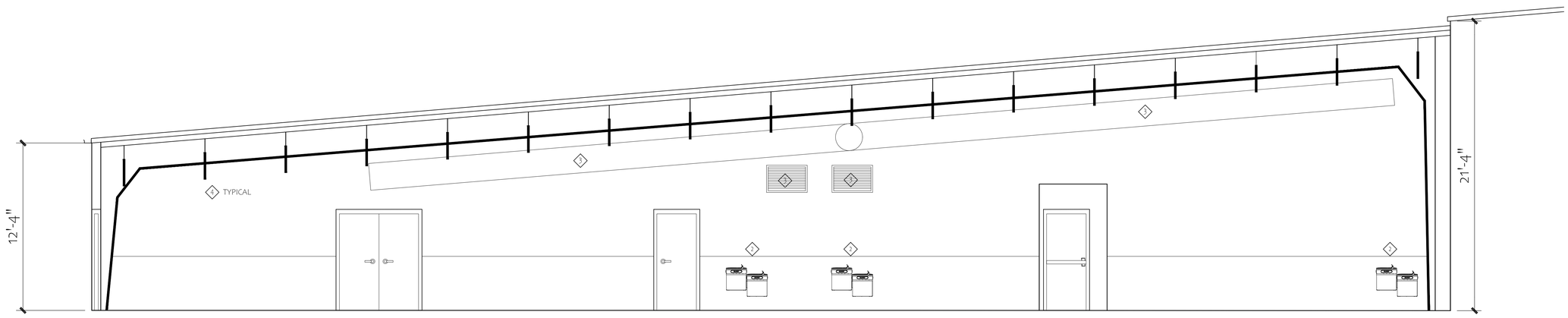

KEYED PLAN NOTES:

1. NEW EXTERIOR WATER FOUNTAIN.
2. NEW ELECTRIC WATER COOLER.
3. NEW HVAC UNIT AND / OR DUCTWORK.
4. NEW ACOUSTICAL PANEL WITH INTEGRAL LIGHTING FIXTURE.
5. NEW INDUSTRIAL CEILING FAN.

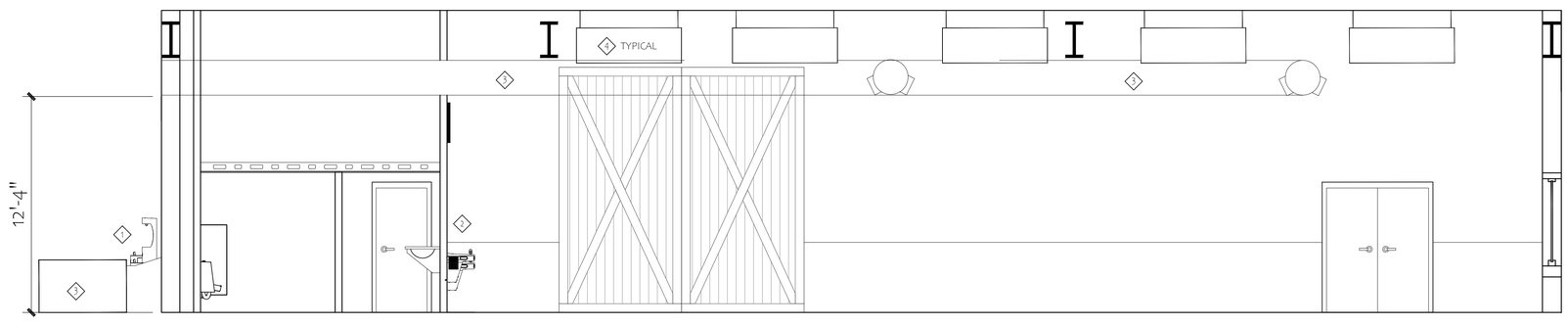

N

01 INTERIOR ELEVATIONS
SCALE: 1/4"=1'-0"

A-1X-PLANS_2208

CAIRN DESIGN LLC
leading high performance building solutions

1805 Sheely Drive
Fort Collins, CO 80526

voice: (970)-286-7968

cairndesignllc.com

STATE OF COLORADO
KATHERINE V. LIGON
404152
LICENSED ARCHITECT

PROJECT:

LOGAN COUNTY COMMUNITY CENTER ADDITION

SHEET TITLE:

BUILDING ELEVATIONS

-

ISSUE DATE:

BID/PERMIT
12/16/2022

REVISIONS:

-
-
-
-

PROJECT NO.:
2208

SHEET NO.

A-32

As instruments of service, these drawings and the design represented are the permanent property of Cairn Design, LLC. Reproduction or use of these drawings other than for the project intended, without written consent from the Designer, is prohibited. Unauthorized use will be subject to legal action.

KEYED PLAN NOTES:

1. FRAMED OPENING FOR 3'-0" X 7'-0" INSULATED METAL EXTERIOR DOOR WITH H.M. FRAME.
2. FRAMED OPENING FOR 4'-0" X 7'0" DOOR PAIR WITH H.M. FRAME.
3. FRAMED OPENING FOR 3'-6" X 7'0" DOOR PAIR WITH H.M. FRAME.
4. FRAMED OPENING FOR 3'-0" X 7'0" DOOR PAIR WITH H.M. FRAME.
5. FRAMED OPENING, EXISTING 14'-0" X 16'-0" ROLL UP DOOR IN EXISTING BUILDING TO REMAIN.
6. FRAMED OPENING FOR 11'-6" X 4'-6" PASS THROUGH, 30" AFF.
7. FRAMED OPENING FOR 8'-0" X 6'-0" WINDOW.

GENERAL NOTES:

1. METAL BUILDING ENVELOPE INSULATION SHALL INCLUDE INTERIOR VAPOR BARRIER AT INTERIOR WALL AND ROOF FACES.
2. ALIGN INSIDE FACE OF GIRT SYSTEM AND STUD FRAMING WITH INSIDE FACE OF FOUNDATION STEM WALL AT EXTERIOR WALLS, TYP.
3. PROVIDE BREAK METAL TRIM AT DOOR AND WINDOW OPENINGS IN METAL SIDING AS REQUIRED TO WEATHERPROOF JOINT. BREAK METAL SHALL MATCH ADJACENT METAL SIDING COLOR, TYP.
4. COLUMN SPACING SHOWN ON DRAWINGS IS DIAGRAMMATIC. BUILDING SUPPLIER SHALL PROVIDE MAIN FRAME AND END WALL COLUMN SPACING AS REQUIRED; HOWEVER, OPENINGS SHALL REMAIN AS SHOWN.
5. METAL BUILDING SUPPLIER SHALL PROVIDE ALL HEADER GIRTS, TERMINATION TRIM WITH DRIP EDGE, SILL FLASHING AND SIDE TERMINATION TRIM AT ALL WINDOW AND DOOR OPENINGS.
6. ALL METAL BUILDING PARTS NOT PROVIDED WITH A FACTORY FINISH SHALL BE PRIMED AND PAINTED.
7. PROVIDE DOUBLE GIRTS AND VERTICAL SUPPORTS FOR PORCH FRAMING. SEE PORCH FRAMING DETAILS.

2006 IECC PRESCRIPTIVE REQUIREMENTS, CLIMATE ZONE 5

TABLE 502.2(1) BUILDING ENVELOPE REQUIREMENTS

ROOF, METAL BUILDING, WITH R-5 THERMAL BLOCKS = MIN. R-19
WALLS ABOVE GRADE = MIN. R-13 + R-13 CONTINUOUS
WALLS BELOW GRADE = NO REQUIREMENT
SLABS ON GRADE, UNHEATED = NO REQUIREMENT
OPAQUE DOORS, SWINGING = MAX. U-0.70

METAL BUILDING ASSEMBLY DESCRIPTIONS, TABLE 502.2(2)

ROOFS
STANDING SEAM WITH SINGLE INSULATION LAYER

THERMAL BLOCKS ARE A MINIMUM R-5 OF RIGID INSULATION, WHICH EXTENDS 1 BEYOND THE WIDTH OF THE PURLIN ON EACH SIDE, PERPENDICULAR TO THE PURLIN

THIS CONSTRUCTION R-19 INSULATION BATTS DRAPED PERPENDICULARLY OVER THE PURLINS. THERMAL BLOCKS ARE THEN PLACED ABOVE THE PURLIN/BATT, AND THE ROOF DECK IS SECURED TO THE PURLINS

REFERENCE ASHRAE/IESNA 90.1 TABLE A2.3

WALLS
DOUBLE INSULATION LAYER

THE FIRST LAYER OF R-13 INSULATION BATTS IS INSTALLED CONTINUOUSLY PERPENDICULAR TO THE GIRTS, AND IS COMPRESSED AS THE METAL SKIN IS ATTACHED TO THE GIRTS. THE SECOND LAYER OF R-13 INSULATION BATTS IS INSTALLED WITHIN THE FRAMING CAVITY

REFERENCE ASHRAE/IESNA 90.1 TABLE A3.2

TABLE 502.3 FENESTRATION (40% MAX. OF ABOVE-GRADE WALL)
STOREFRONT WITH OR WITHOUT THERMAL BREAK = MAX. U-0.45
ENTRANCE DOOR = MAX. U-0.80 SHGC, PF < 0.25 = MAX. 0.40

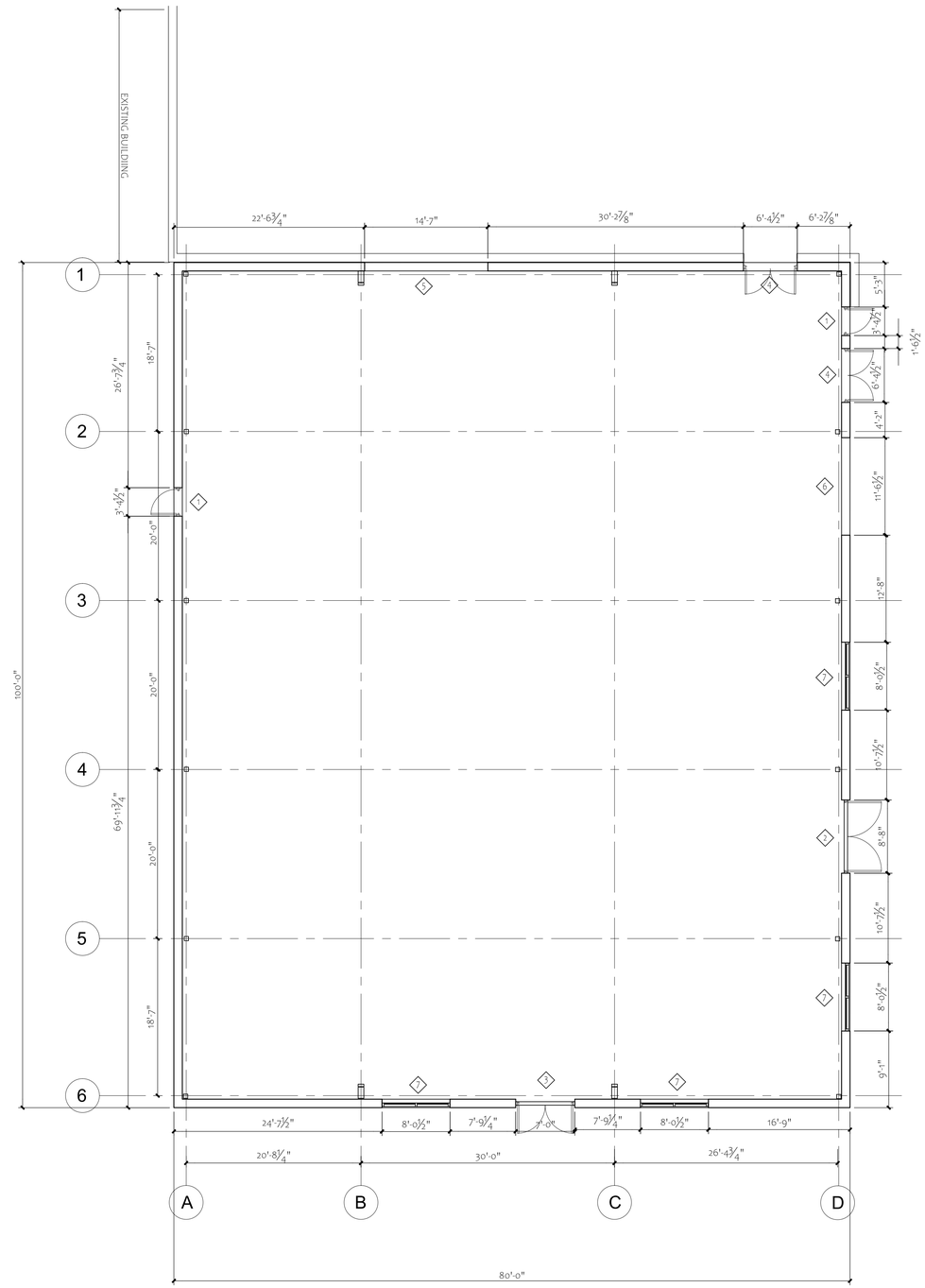

01 FLOOR PLAN
SCALE: 1/8" = 1'-0"

A-IX-PLANS_2208

CAIRN DESIGN LLC
leading high performance building solutions

1805 Sheely Drive
Fort Collins, CO 80526

voice: (970)-286-7968

cairndesignllc.com

STATE OF COLORADO
KATHERINE V. LIGON
404152
LICENSED ARCHITECT

PROJECT:

LOGAN COUNTY COMMUNITY CENTER ADDITION

SHEET TITLE:

FIRST FLOOR PEMB

-

ISSUE DATE:

BID/PERMIT
12/16/2022

REVISIONS:

-
-
-
-

PROJECT NO.:
2208

SHEET NO.

A-40

As instruments of service, these drawings and the design represented are the permanent property of Cairn Design, LLC. Reproduction or use of these drawings other than for the project intended, without written consent from the Designer, is prohibited. Unauthorized use will be subject to legal action.

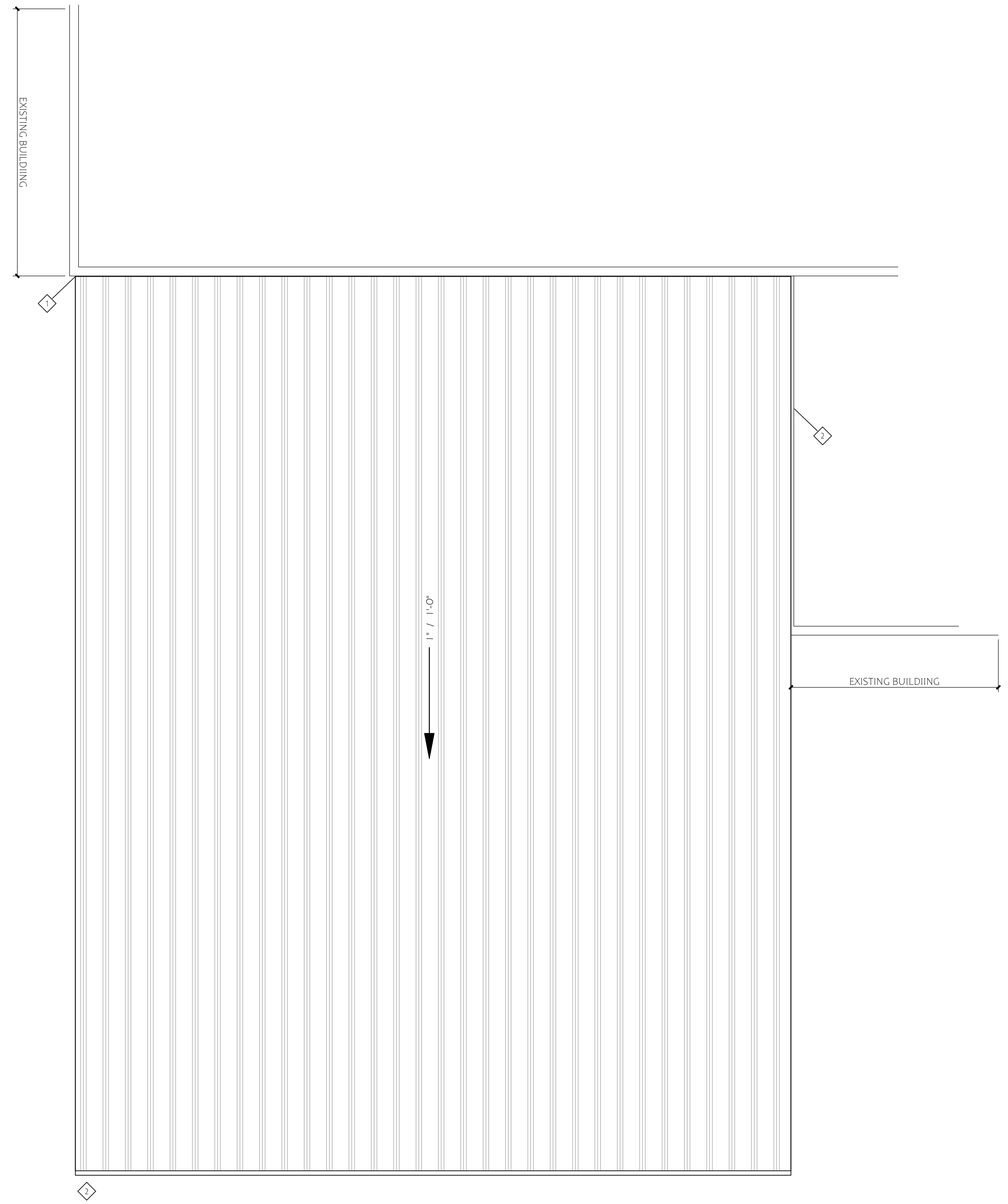

KEYED PLAN NOTES:

1. METAL BUILDING SUPPLIER SHALL PROVIDE END WALL FLASHING FOR JOINT AT EXISTING BUILDING. FLASHING SHALL MATCH SIDING COLOR.
2. METAL BUILDING SUPPLIER SHALL PROVIDE SIDE WALL FLASHING FOR JOINT AT EXISTING BUILDING. FLASHING SHALL MATCH SIDING COLOR.
3. CONTINUOUS GUTTER, 7" X 7" RECTANGULAR GUTTER. PROVIDE FOUR 3.75" X 5" DOWNSPOUTS, OR EQUIVALENT ROUND. GUTTER COLOR SHALL MATCH TRIM COLOR. DOWNSPOUT COLOR SHALL MATCH SIDING.

GENERAL NOTES:

1. ROOFING SHALL BE A TRIPLE-LOK STANDING SEAM RIBBED SYSTEM PROVIDED WITH METAL BUILDING PACKAGE, COLOR SHALL MATCH EXISTING BUILDINGS. PROVIDE SYSTEM WITH 20 YEAR WEATHER TIGHTNESS WARRANTY. INCLUDE SYSTEM DETAILS AND LAYOUT DRAWINGS WITH SUBMITTAL FOR ARCHITECT'S APPROVAL. ROOF FLASHING IS REQUIRED AT ALL WALL/ROOF INTERSECTIONS. PREFINISHED METAL COLORS FOR THE ROOF, FASCIA AND GUTTER MATERIALS SHALL MATCH EXISTING BUILDING COMPONENTS.
2. INSTALL GUTTERS, DOWNSPOUTS, AND DRIP EDGES. INSTALL DRIP EDGES ON BOTH EAVES AND RAKES OF ROOF. MATCH EXISTING BUILDING COLORS.
3. ALL ROOF FLASHING, ACCESSORIES, GUTTERS & DOWNSPOUTS SHALL BE 24 GA. PREFINISHED METAL.

N

01 CEILING PLAN
SCALE: 1/8" = 1'-0"

A-1X-PLANS_2208

CAIRN DESIGN LLC
leading high performance building solutions

1805 Sheely Drive
Fort Collins, CO 80526

voice: (970)-286-7968

cairndesignllc.com

STATE OF COLORADO
KATHERINE V. LIGON
404152
LICENSED ARCHITECT

PROJECT:

LOGAN COUNTY
COMMUNITY CENTER
ADDITION

SHEET TITLE:

ROOF PLAN
AND NOTES

-

ISSUE DATE:

BID/PERMIT
12/16/2022

REVISIONS:

-
-
-

PROJECT NO.:
2208

SHEET NO.

A-41

As instruments of service, these drawings and the design represented are the permanent property of Cairn Design, LLC. Reproduction or use of these drawings other than for the project intended, without written consent from the Designer, is prohibited. Unauthorized use will be subject to legal action.

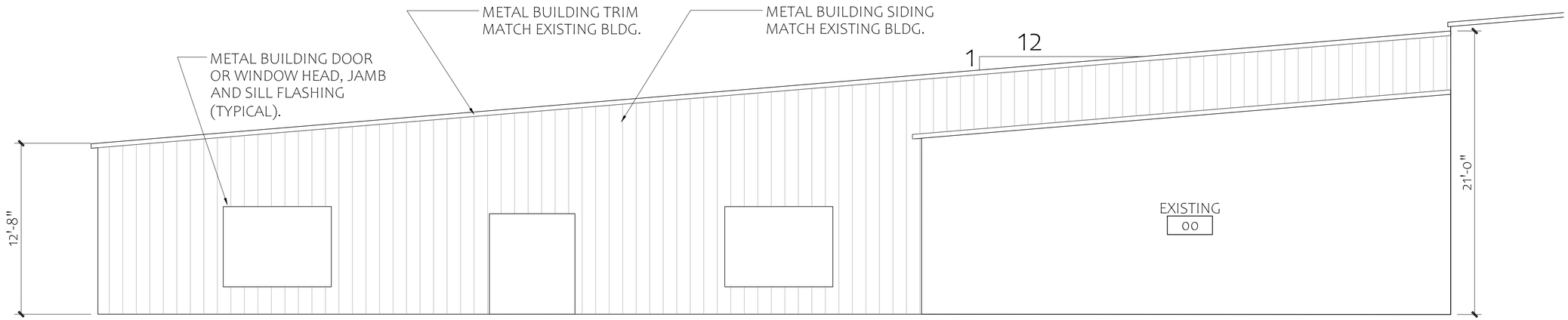

03 BUILDING ELEVATIONS - EAST WALL
SCALE: 1/4"=1'-0"
A-1X-PLANS_2208

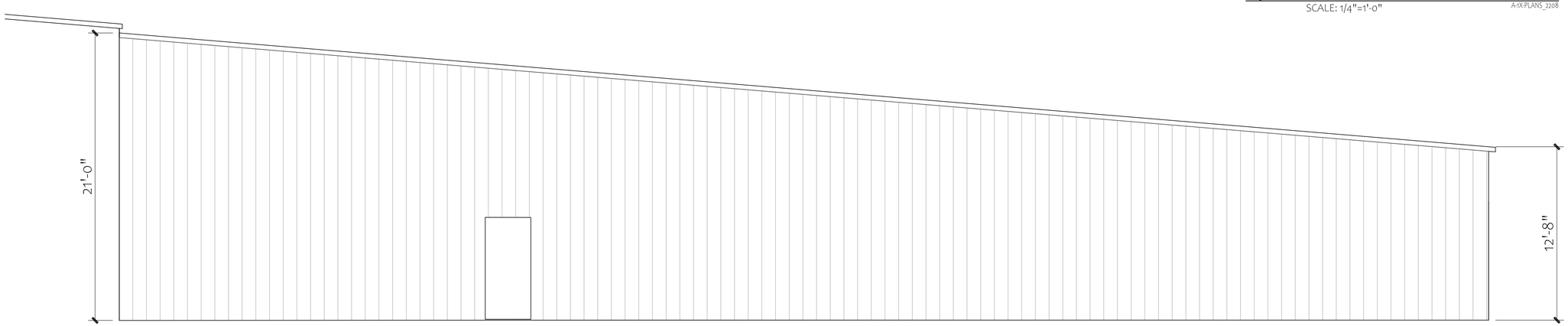

02 BUILDING ELEVATIONS - WEST WALL
SCALE: 1/4"=1'-0"
A-1X-PLANS_2208

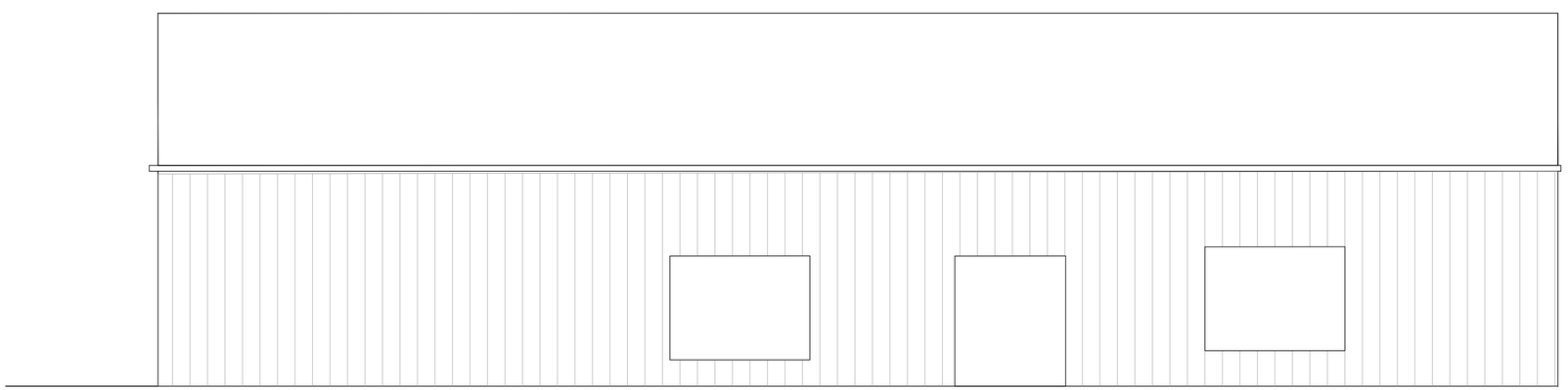

01 BUILDING ELEVATIONS - SOUTH WALL
SCALE: 1/4"=1'-0"
A-1X-PLANS_2208

CAIRN DESIGN LLC
leading high performance building solutions

1805 Sheely Drive
Fort Collins, CO 80526

voice: (970)-286-7968

cairndesignllc.com

STATE OF COLORADO
KATHERINE V. LIGON
404152
LICENSED ARCHITECT

PROJECT:

LOGAN COUNTY
COMMUNITY CENTER
ADDITION

SHEET TITLE:

BUILDING
ELEVATIONS

-

ISSUE DATE:

BID/PERMIT
12/16/2022

REVISIONS:

-
-
-
-

PROJECT NO.:
2208

SHEET NO.

A-42

As instruments of service, these drawings and the design represented are the permanent property of Cairn Design, LLC. Reproduction or use of these drawings other than for the project intended, without written consent from the Designer, is prohibited. Unauthorized use will be subject to legal action.

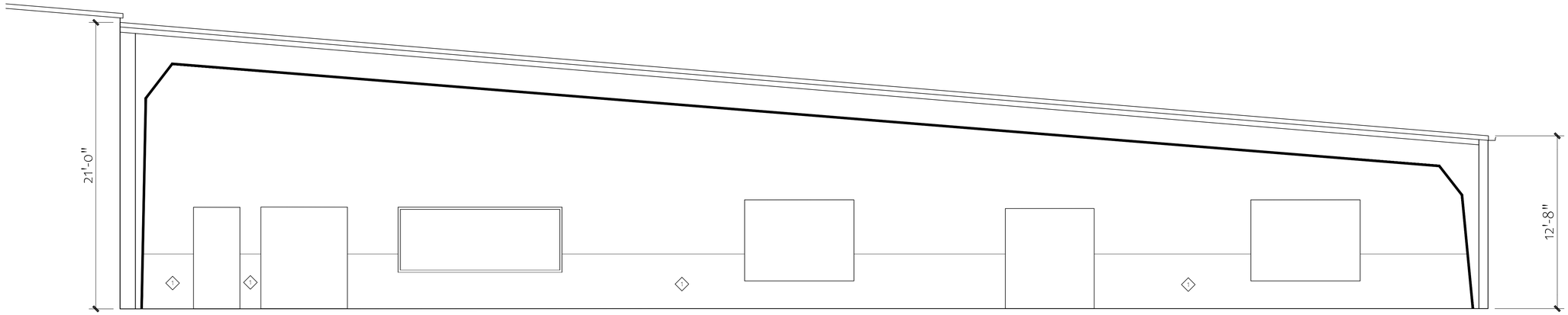

03 BUILDING SECTIONS - EAST WALL
SCALE: 1/4"=1'-0"

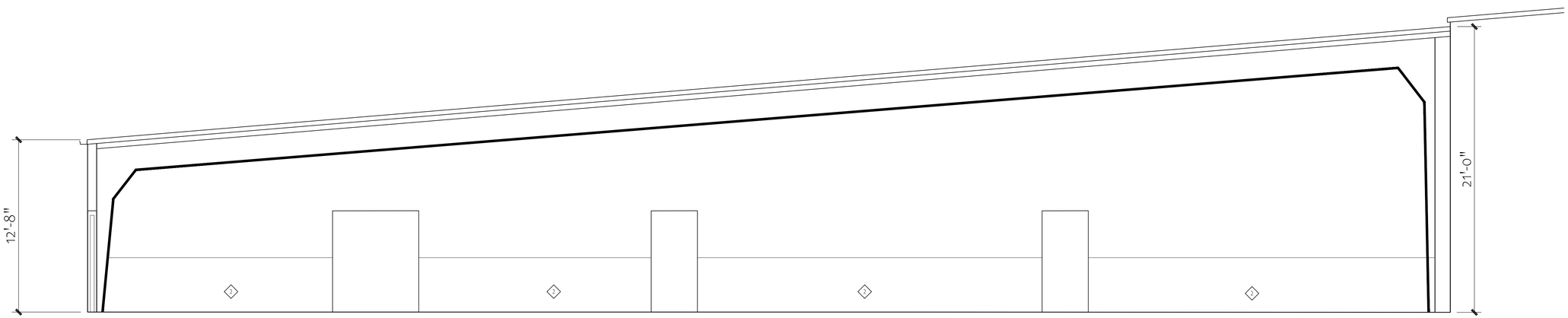

02 BUILDING SECTIONS - WEST WALL
SCALE: 1/4"=1'-0"

KEYED PLAN NOTES:

1. METAL BUILDING SUPPLIER SHALL PROVIDE STANDARD LINER PANEL TO 48" AFF WITH TOP CAP ON ALL FOUR INTERIOR WALLS OF BUILDING. FINISH SHALL BE WHITE. PROVIDE VERTICAL "J" TRIM TO MATCH TOP CAP AT ALL OPENINGS. INSTALLATION CONTRACTOR WILL PROVIDE GYPSUM BOARD PANELS ABOVE LINER PANEL.
2. LINER PANEL ON WEST WALL WILL BE INSTALLED ON INTERIOR PARTITION WALL BY INSTALLATION CONTRACTOR.

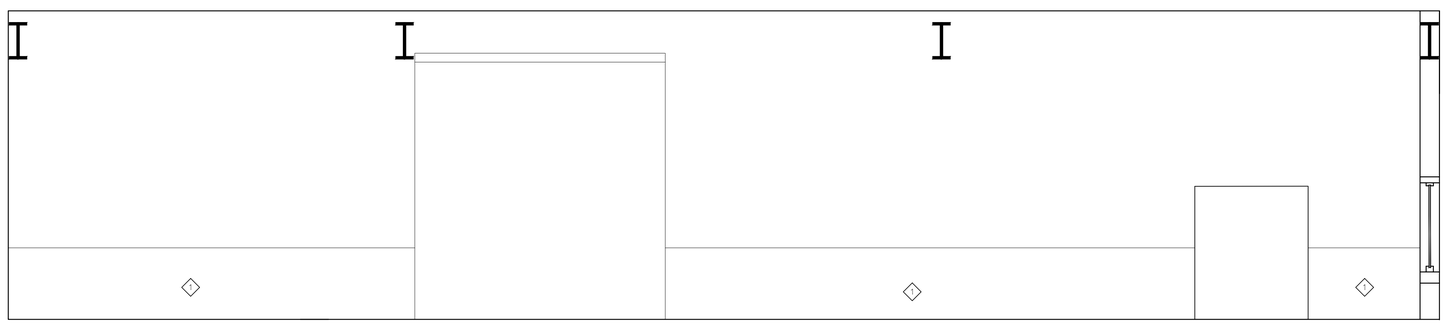

01 BUILDING SECTIONS - NORTH WALL
SCALE: 1/4"=1'-0"

A-IX-PLANS_2208

CAIRN DESIGN LLC
leading high performance building solutions
1805 Sheely Drive
Fort Collins, CO 80526
voice: (970)-286-7968
cairndesignllc.com

STATE OF COLORADO
KATHERINE V. LIGON
404152
LICENSED ARCHITECT

PROJECT:
LOGAN COUNTY COMMUNITY CENTER ADDITION

SHEET TITLE:
BUILDING SECTIONS
-

ISSUE DATE:
BID/PERMIT
12/16/2022

REVISIONS:
-
-
-
-

PROJECT NO.:
2208

SHEET NO.
A-43

As instruments of service, these drawings and the design represented are the permanent property of Cairn Design, LLC. Reproduction or use of these drawings other than for the project intended, without written consent from the Designer, is prohibited. Unauthorized use will be subject to legal action.

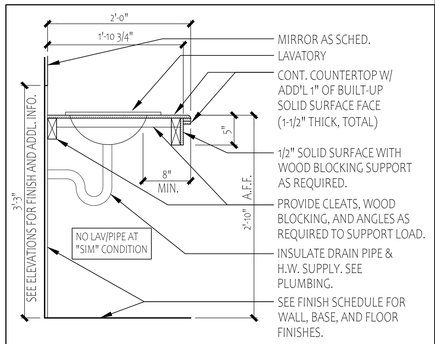

07 SECTION AT VANITY (TYPICAL)

1"=1'-0" A-DT-008

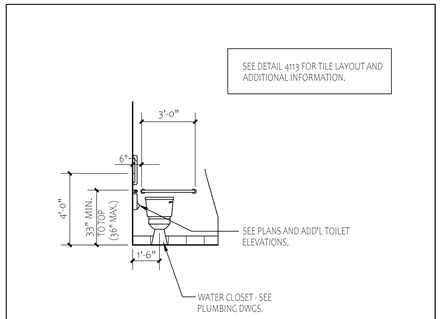

04 TOILET ELEVATION

1/4"=1'-0" A-DT-003

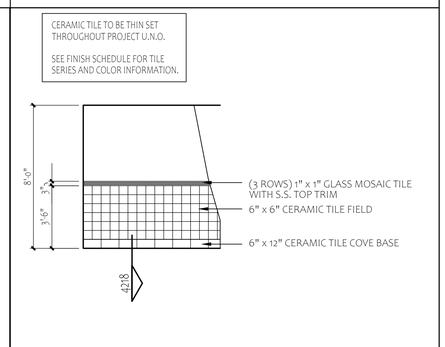

03 BATHROOM TILE LAYOUT, TYPICAL

1/4"=1'-0" A-DT-020

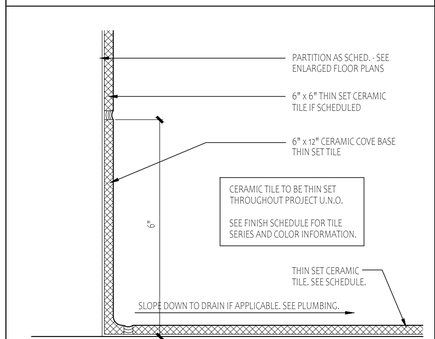

06 CERAMIC TILE BASE DETAIL

6"=1'-0" A-DT-016

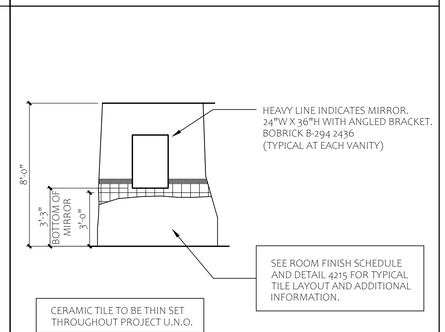

02 BATHROOM TILE LAYOUT @ MIRROR, TYP.

1/4"=1'-0" A-DT-022

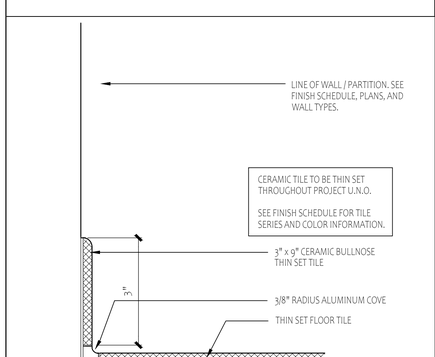

05 CERAMIC TILE BASE DETAIL

6"=1'-0" A-DT-018

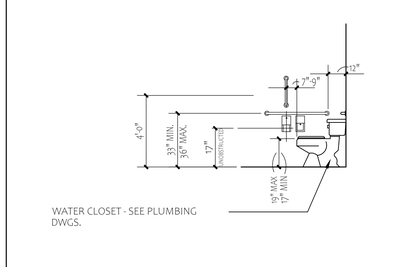

01 HC TOILET ELEVATION

1/4"=1'-0" A-DT-002

CAIRN DESIGN LLC
leading high performance building solutions

1805 Sheely Drive
Fort Collins, CO 80526

voice: (970)-286-7968

cairndesignllc.com

STATE OF COLORADO
KATHERINE LIGON 404152
LICENSED ARCHITECT

PROJECT:

LOGAN COUNTY COMMUNITY CENTER ADDITION

SHEET TITLE:

ELEVATIONS AND DETAILS

ISSUE DATE:

BID/PERMIT
12/16/2022

REVISIONS:

-
-
-
-

PROJECT NO.:
2208

SHEET NO.

A-50

As instruments of service, these drawings and the design represented are the permanent property of Cairn Design, LLC. Reproduction or use of these drawings other than for the project intended, without written consent from the Designer, is prohibited. Unauthorized use will be subject to legal action.

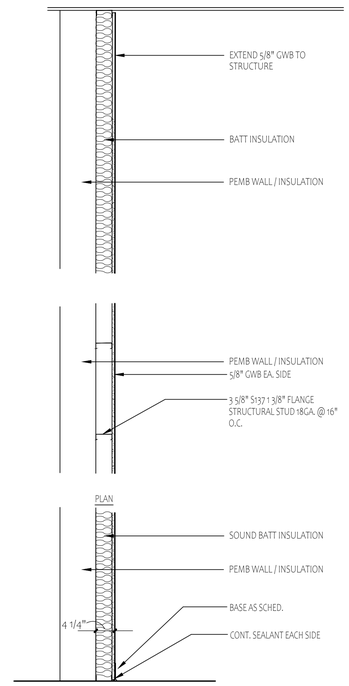

11 TYPE C
3/4"=1'-0"
A-WD-001

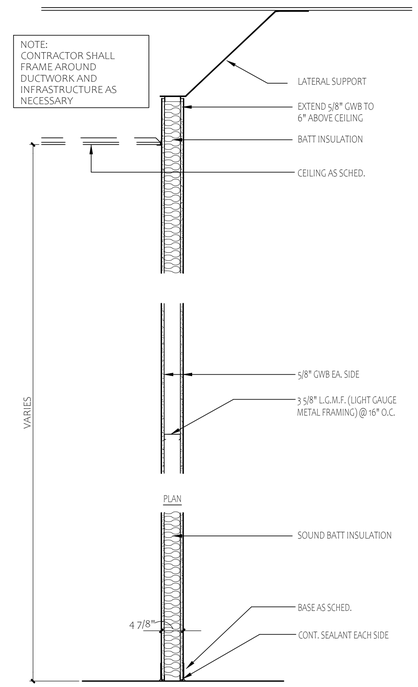

07 TYPE B
3/4"=1'-0"
A-WD-001

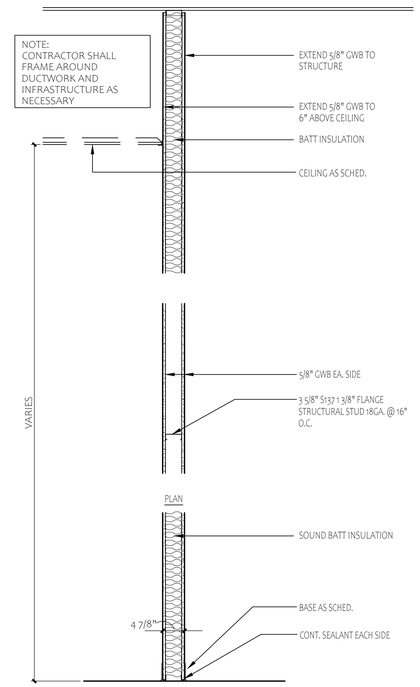

03 TYPE A
3/4"=1'-0"
A-WD-001

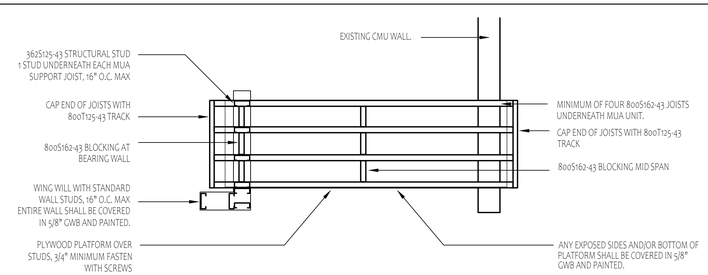

01 MUA UNIT PLATFORM
NOT TO SCALE
A-DW-005

CAIRN DESIGN LLC
leading high performance building solutions

1805 Sheely Drive
Fort Collins, CO 80526

voice: (970)-286-7968

cairndesignllc.com

STATE OF COLORADO
KATHERINE W. LIGON
404152
LICENSED ARCHITECT

PROJECT:

LOGAN COUNTY COMMUNITY CENTER ADDITION

SHEET TITLE:

PARTITION TYPES AND DETAILS
-
-

ISSUE DATE:

BID/PERMIT
12/16/2022

REVISIONS:

-
-
-
-

PROJECT NO.:
2208

SHEET NO.

A-51

As instruments of service, these drawings and the design represented are the permanent property of Cairn Design, LLC. Reproduction or use of these drawings other than for the project intended, without written consent from the Designer, is prohibited. Unauthorized use will be subject to legal action.

DOOR AND FRAME SCHEDULE

DOOR NO.	DOOR							FRAME						LBL.	HDW.	NOTES / REMARKS
	NOMINAL SIZE									DETAILS						
	PAIR	WIDTH	HGHT.	THICK	MAT.	TYPE	FIN.	MAT.	TYPE	HEAD	JAMBS		THOLD			
01A	PR	4'-0"	7'-0"	1-3/4"	SF	A	AN	HM	SF	-	-	-	-	-	EXIT	NOTES 1, 2, 3
01B	PR	3'-4"	7'-0"	1-3/4"	SF	A	AN	HM	SF	-	-	-	-	-	EXIT	NOTES 1, 2, 3
01C	PR	3'-0"	7'-0"	1-3/4"	WD	B	ST&V	HM	F-2	-	-	-	-	-	-	NOTE 5
01D	PR	3'-0"	7'-0"	1-3/4"	ST	B	PAINT	HM	F-2	-	-	-	-	-	F82	NOTE 2, 3
01E	-	3'-0"	7'-0"	1-3/4"	WD	B	ST&V	HM	F-1	-	-	-	-	-	F82	-
02A	PR	3'-0"	7'-0"	1-3/4"	WD	B	ST&V	HM	F-2	-	-	-	-	-	F86	NOTES 2, 3
02B	-	11'-6"	4'-0"	3/4"	ST		SS	HM	-	-	-	-	-	-	LOCK	NOTE 4
03	-	3'-0"	7'-0"	1-3/4"	WD	B	ST&V	HM	F-1	-	-	-	-	-	F75	-
04	-	3'-0"	7'-0"	1-3/4"	ST	B	PAINT	HM	F-1	-	-	-	-	-	EXIT	NOTES 1, 3
05	-	3'-0"	7'-0"	1-3/4"	WD	B	ST&V	HM	F-1	-	-	-	-	-	F75	-
06A	-	3'-0"	7'-0"	1-3/4"	WD	B	ST&V	HM	F-1	-	-	-	-	-	F86	-
06B	-	3'-0"	7'-0"	1-3/4"	WD	B	ST&V	HM	F-1	-	-	-	-	-	F86	-
07	PR	3'-0"	7'-0"	1-3/4"	WD	B	ST&V	HM	F-2	-	-	-	-	-	F86	NOTES 2, 3

NOTES

GENERAL NOTES:

CONTRACTOR TO SUBMIT HARDWARE SELECTIONS TO ARCHITECT FOR APPROVAL PRIOR TO PURCHASE. SEE SPECIFICATIONS FOR ADDITIONAL INFORMATION.

THRESHOLD(S), IF INDICATED, BY CONTRACTOR.

PROVIDE STAINLESS STEEL CONCAVE WALL STOP, HAGER 236W OR EQUAL, AT ALL NEW DOORS, AS WELL AS AT ALL EXISTING DOORS THAT DO NOT CURRENTLY HAVE ONE. IF WALL STOP CANNOT BE USED, PROVIDE HAGER 244F OR 245F FLOOR STOP, AS APPROPRIATE.

PROVIDE DOOR GASKETS FOR ALL EXTERIOR DOORS AND DOORS INTO ARENA.

HARDWARE CODES:

- F75 = PASSAGE
- F76 = PRIVACY
- F82 = ENTRANCE/OFFICE
- F84 = CLASSROOM
- F86 = STOREROOM
- EXIT = CRASH BAR

NOTES:

1. PROVIDE VON DUPRIN RIM EXIT DEVICE INSIDE WITH KEYED (F86) TRIM OUTSIDE.
2. PROVIDE DOOR HOLD OPEN, TOP AND BOTTOM FLUSH BOLTS,
3. PROVIDE NORTON 8000 SERIES DOOR CLOSER WITH PARALLEL ARM AND DOOR STOP.
4. ROLLING COUNTER DOOR BY OVERHEAD DOOR, MODEL #657, 22GA S.S. OR EQUAL. PROVIDE LOCKING HARDWARE.
5. PROVIDE BARN DOOR HARDWARE KIT FOR TWO DOORS. DOORS SHALL SLIDE OPPOSITE EACH OTHER TO OPEN. PROVIDE LOCK HASP FOR EACH DOOR.

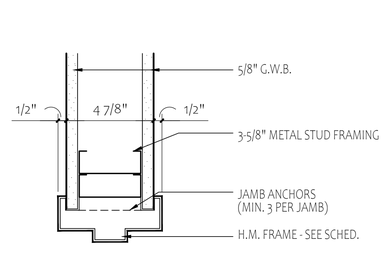

02 JAMB DETAIL
3"=1'-0" A-WD-003

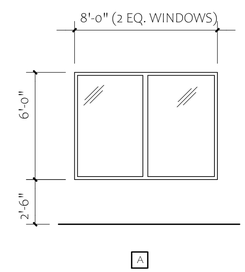

WINDOW TYPES
1/4" = 1'-0" A-DW-003

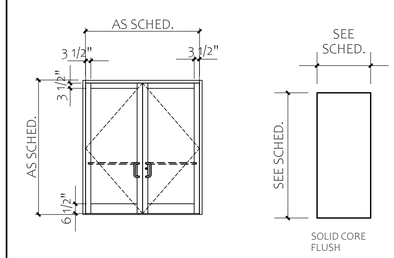

A B

06 DOOR TYPES
1/4"=1'-0" A-DW-002

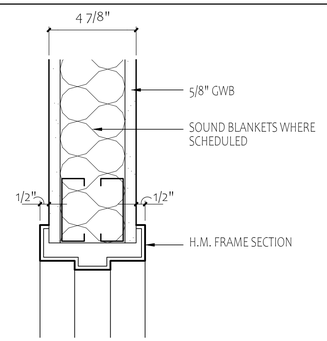

09 HEAD DETAIL
3"=1'-0" A-WD-004

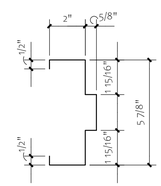

FS-1

05 H.M. FRAME SECTIONS
3" = 1'-0" A-DW-004

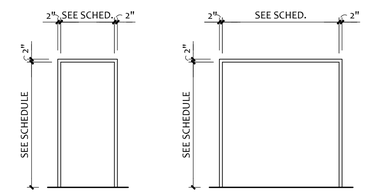

F-1 HM FRAME SECTION: FS-1 U.N.O.

F-2 HM FRAME SECTION: FS-1 U.N.O.

FRAME TYPES
1/4"=1'-0" A-DW-001

CAIRN DESIGN LLC
leading high performance building solutions
1805 Sheely Drive
Fort Collins, CO 80526
voice: (970)-286-7968
cairndesignllc.com

STATE OF COLORADO
KATHERINE W. LIGON
404152
LICENSED ARCHITECT

PROJECT:

LOGAN COUNTY COMMUNITY CENTER ADDITION

SHEET TITLE:

DOOR AND FRAME SCHEDULE; DOOR, WINDOW, AND FRAME DETAILS

ISSUE DATE:

BID/PERMIT
12/16/2022

REVISIONS:

-
-
-
-

PROJECT NO.:
2208

SHEET NO.

A-61

As instruments of service, these drawings and the design represented are the permanent property of Cairn Design, LLC. Reproduction or use of these drawings other than for the project intended, without written consent from the Designer, is prohibited. Unauthorized use will be subject to legal action.

A-RF-01

ROOM / COLOR FINISH SCHEDULE

ROOM NO.	ROOM NAME	FLR. MAT.	BASE MAT.	WALLS N	C.	S	C.	E	C.	W	C.	CEILINGS MAT.	C.	TRIM MAT.	C.	SIGN. QTY.	NOTES
001	COMMUNITY CNTR	F1	B2	W1	P4	W1	P1	W1	P1	W1	P1	C1	P2	-	P3	-	NOTE 1
002	KITCHEN	F2	B2	W1	P1	W1	P1	W1	P1	W1	P1	C2	-	-	-	-	
003	WOMENS	F3	B2	W1	P1	W1	P1	W1	P1	W1	P1	C3	-	-	P3	1	SEE DETAILS FOR CERAMIC TILE. PROVIDE ADA SIGN FOR RESTROOM
004	CORRIDOR	F1	B2	W1	P1	W1	P1	W1	P1	W1	P1	C3	-	-	P3	1	PROVIDE SIGN FOR BARN DOORS "DOORS MUST REMAIN OPEN WHEN BUILDING IS OCCUPIED"
005	MENS	F3	B1	W1	P1	W1	P1	W1	P1	W1	P1	C3	-	-	P3	1	SEE DETAILS FOR CERAMIC TILE. PROVIDE ADA SIGN FOR RESTROOM
006	JANITOR	F2	B1	W1	P1	W1	P1	W1	P1	W1	P1	C1	-	-	P3	-	PROVIDE W3 FINISH WITHIN 4' OF JANITOR'S SINK
007	STORAGE	F1	B2	W1	P1	W1	P1	W1	P1	W1	P1	C1	-	-	P3	-	

FINISH SCHEDULE LEGEND

FLOOR
- F1 SEALED CONCRETE
- F2 VINYL COMPOSITION TILE
- F3 CERAMIC FLOOR TILE: 18" X 18" DALTILE OR EQUAL

BASE
- B1 RESILIENT BASE
- B2 RESILIENT BASE
- B3 CERAMIC TILE COVE BASE, DALTILE OR EQUAL

WALL
- W1 PAINTED GWB, ORANGE PEEL TEXTURE.
- W2 TILE ON CONCRETE BACKER BOARD.
- W3 FRP PANEL

PAINT
- P1 OLYMPIC-C16-2 GLAZED PEARS
- P2 OLYMPIC-C12-4 AUDUBON-WILLOW TREE
- P3 GENERAL PAINT RACCOON 3176
- P4 ACCENT PAINT - VERIFY COLOR WITH OWNER

CEILING
- C1 OPEN STRUCTURE NO CEILING. PAINT AS SCHEDULED
- C2 2X2 RATED ACT AND GRID. SEE REFLECTED CEILING PLAN FOR LAYOUT AND SPECS FOR ADDITIONAL INFORMATION.
- C3 5/8" GWB. PAINT GWB AS SCHEDULED.

FINISH SCHEDULE NOTES

GENERAL NOTES, APPLICABLE THROUGHOUT:

A. ALIGN TILE JOINTS WHERE POSSIBLE, INCLUDING, BUT NOT LIMITED TO, BETWEEN BASE AND FIELD WALL TILE; FIELD WALL TILE AND ACCENT TILE; AND WALL TILE AND TILED MIRROR SURROUND. SEE TYPICAL TILE LAYOUT DETAILS.
B. ALL ROOF DECK, STRUCTURE, FRAMING, CONDUIT, HANGERS, ETC. SHALL BE PAINTED PRIOR TO INSTALLING DUCTWORK, LIGHT FIXTURES, ETC.
C. CONTRACTOR SHALL PROVIDE TRANSITION STRIPS FROM TILE TO VCT OR SEALED CONCRETE.
D. ALL COLORS TO BE CHOSEN AND APPROVED BY OWNER'S REPRESENTATIVE.

ADDITIONAL FINISHES

SOLID SURFACE, U.N.O.
HANEX H-L038 "AMBER"

CAIRN DESIGN LLC
leading high performance building solutions

1805 Sheely Drive
Fort Collins, CO 80526

voice: (970)-286-7968

cairndesignllc.com

STATE OF COLORADO
KATHERINE W. LIGON
404152
LICENSED ARCHITECT

PROJECT:

LOGAN COUNTY COMMUNITY CENTER ADDITION

SHEET TITLE:

FINISH SCHEDULE AND FINISH PLAN
-
-

ISSUE DATE:

BID/PERMIT
12/16/2022

REVISIONS:

-
-
-
-

PROJECT NO.:
2208

SHEET NO.

A-62

As instruments of service, these drawings and the design represented are the permanent property of Cairn Design, LLC. Reproduction or use of these drawings other than for the project intended, without written consent from the Designer, is prohibited. Unauthorized use will be subject to legal action.

COM*check* Software Version 4.1.1.0

Envelope Compliance Certificate

Section 1: Project Information

Energy Code: **2009 IECC**
Project Title: LOGAN COUNTY COMMUNITY CENTER
Project Type: New Construction

Construction Site:	Owner/Agent:	Designer/Contractor:
LOGAN COUNTY FAIRGROUNDS STERLING, CO, CO	LOGAN COUNTY STERLING, CO, CO	CAIRN DESIGN, LLC FORT COLLINS, CO, CO

Building Location (for weather data): Sterling, Colorado
Climate Zone: 5b
Vertical Glazing / Wall Area Pct.: **5%**

Building Use: Activity Type(s)	Floor Area
1-COMMUNITY CENTER (Convention Center) : Nonresidential	8000

Section 2: Envelope Assemblies and Requirements Checklist

Envelope PASSES: Design 3% better than code.

Envelope Assemblies:

Component Name/Description	Gross Area or Perimeter	Cavity R-Value	Cont. R-Value	Proposed U-Factor	Budget U-Factor(a)
Orientation: NORTH					
Exterior Wall 1 copy 3: Metal Building Wall, Single Layer Mineral Fiber (compressed at girt), [Bldg. Use 1 - COMMUNITY CENTER]	1706	13.0	13.0	0.046	0.069
Orientation: EAST					
Exterior Wall 1 copy 1: Metal Building Wall, Single Layer Mineral Fiber (compressed at girt), [Bldg. Use 1 - COMMUNITY CENTER]	1651	13.0	13.0	0.046	0.069
Window 1: Metal Frame Curtain Wall/Storefront, Perf. Type: Energy code default, Double Pane, Clear , SHGC 0.70, [Bldg. Use 1 - COMMUNITY CENTER]	48	---	---	0.800	0.450
Window 1 copy 1: Metal Frame Curtain Wall/Storefront, Perf. Type: Energy code default, Double Pane, Clear , SHGC 0.70, [Bldg. Use 1 - COMMUNITY CENTER]	48	---	---	0.800	0.450
Door 1: Glass (> 50% glazing):Metal Frame, Entrance Door, Perf. Type: Energy code default, Double Pane, Clear , SHGC 0.70, [Bldg. Use 1 - COMMUNITY CENTER]	56	---	---	0.800	0.800
Orientation: SOUTH					
Exterior Wall 1 copy 2: Metal Building Wall, Single Layer Mineral Fiber (compressed at girt), [Bldg. Use 1 - COMMUNITY CENTER]	980	13.0	13.0	0.046	0.069
Window 3: Metal Frame Curtain Wall/Storefront, Perf. Type: Energy code default, Double Pane, Clear , SHGC 0.70, [Bldg. Use 1 - COMMUNITY CENTER]	48	---	---	0.800	0.450
Window 3 copy 1: Metal Frame Curtain Wall/Storefront, Perf. Type: Energy code default, Double Pane, Clear , SHGC 0.70, [Bldg. Use 1 - COMMUNITY CENTER]	48	---	---	0.800	0.450
Door 2: Glass (> 50% glazing):Metal Frame, Entrance Door, Perf. Type: Energy code default, Double Pane, Clear , SHGC 0.70, [Bldg. Use 1 - COMMUNITY CENTER]	46	---	---	0.800	0.800
Orientation: WEST					
Exterior Wall 1: Metal Building Wall, Single Layer Mineral Fiber (compressed at girt), [Bldg. Use 1 - COMMUNITY CENTER]	1651	13.0	13.0	0.046	0.069

Orientation: UNSPECIFIED ORIENTATION					
Roof 1: Metal Building, Standing Seam, [Bldg. Use 1 - COMMUNITY CENTER]	8000	19.0	5.0	0.049	0.055
Floor 1: Slab-On-Grade:Unheated, [Bldg. Use 1 - COMMUNITY CENTER]	360	---	---	---	---

(a) Budget U-factors are used for software baseline calculations ONLY, and are not code requirements.

Air Leakage, Component Certification, and Vapor Retarder Requirements:

- ❑ 1. All joints and penetrations are caulked, gasketed or covered with a moisture vapor-permeable wrapping material installed in accordance with the manufacturer's installation instructions.
- ❑ 2. Windows, doors, and skylights certified as meeting leakage requirements.
- ❑ 3. Component R-values & U-factors labeled as certified.
- ❑ 4. No roof insulation is installed on a suspended ceiling with removable ceiling panels.
- ❑ 5. 'Other' components have supporting documentation for proposed U-Factors.
- ❑ 6. Insulation installed according to manufacturer's instructions, in substantial contact with the surface being insulated, and in a manner that achieves the rated R-value without compressing the insulation.
- ❑ 7. Stair, elevator shaft vents, and other outdoor air intake and exhaust openings in the building envelope are equipped with motorized dampers.
- ❑ 8. Cargo doors and loading dock doors are weather sealed.
- ❑ 9. Recessed lighting fixtures installed in the building envelope are Type IC rated as meeting ASTM E283, are sealed with gasket or caulk.
- ❑ 10. Building entrance doors have a vestibule equipped with self-closing devices.
  Exceptions:
  - ❑ Building entrances with revolving doors.
  - ❑ Doors not intended to be used as a building entrance.
  - ❑ Doors that open directly from a space less than 3000 sq. ft. in area.
  - ❑ Doors used primarily to facilitate vehicular movement or materials handling and adjacent personnel doors.
  - ❑ Doors opening directly from a sleeping/dwelling unit.

Section 3: Compliance Statement

Compliance Statement: The proposed envelope design represented in this document is consistent with the building plans, specifications and other calculations submitted with this permit application. The proposed envelope system has been designed to meet the 2009 IECC requirements in COM*check* Version 4.1.1.0 and to comply with the mandatory requirements in the Requirements Checklist.

Name - Title _____ Signature _____ Date _____

CAIRN DESIGN LLC
leading high performance building solutions
1805 Sheely Drive
Fort Collins, CO 80526
voice: (970)-286-7968
cairndesignllc.com

STATE OF COLORADO
KATHERINE M. LIGON
404152
LICENSED ARCHITECT

PROJECT:

LOGAN COUNTY
COMMUNITY CENTER
ADDITION

SHEET TITLE:

COMCHECK

-
-

ISSUE DATE:

BID/PERMIT
12/16/2022

REVISIONS:

-
-
-
-

PROJECT NO.:
2208

SHEET NO.

A-70

As instruments of service, these drawings and the design represented are the permanent property of Cairn Design, LLC. Reproduction or use of these drawings other than for the project intended, without written consent from the Designer, is prohibited. Unauthorized use will be subject to legal action.

PLUMBING LEGEND

SYMBOL	ABBREVIATION	DESCRIPTION
	(E)	EXISTING (LIGHT LINE)
	(D) DEMO	TO BE DEMOLISHED
	(N)	NEW (HEAVY LINE)
	CW	DOMESTIC COLD WATER
	HW	DOMESTIC HOT WATER
	HWC	DOMESTIC HOT WATER CIRCULATION
D	D	DRAIN
DIC	DIC	DE-IONIZED WATER CIRCULATION
F	F	FIRE
G	G	GAS
GW	GW	GREASE WASTE
IW	IW	INDIRECT WASTE
ORDL	ORDL	OVERFLOW ROOF DRAIN LEADER
RDL	RDL	ROOF DRAIN LEADER
SAN	SAN	SANITARY WASTE
SOD	SOD	SAND AND OIL DRAIN
ST	ST	STORM
V	V	VENT
W	W	WASTE
	AFF	ABOVE FINISHED FLOOR
	AFG	ABOVE FINISHED GRADE
	BFF	BELOW FINISHED FLOOR
	EC	ELECTRICAL CONTRACTOR
	EOR	ENGINEER OF RECORD
	GC	GENERAL CONTRACTOR
	MC	MECHANICAL CONTRACTOR
	PC	PLUMBING CONTRACTOR

SYMBOL	DESCRIPTION
	PIPE UP AND DOWN ELBOW
	PIPE DOWN TEE
	PIPE CONTINUATION
	PIPE FLOW DIRECTION (SHOWN TO RIGHT)
	PIPE REDUCER
	PIPE UNION AND CAP
	BALL VALVE, GATE VALVE
	MOTORIZED VALVE – 2-WAY
	MOTORIZED VALVE – 3-WAY
	PRESSURE REDUCING VALVE
	CHECK VALVE
	BUTTERFLY VALVE, GLOBE VALVE
	BALANCE VALVE
	STRAINER
	HOSE-END DRAIN VALVE
	STRAINER WITH BLOW-OFF
	VENTURI
	GAS COCK
	PUMP
	DUAL CHECK BACKFLOW PREVENTOR
	REDUCED PRESSURE BACKFLOW PREVENTOR
	PRESSURE-TEMPERATURE TAP
	PRESSURE-TEMPERATURE RELIEF VALVE
	AIR VENT
	PIPE GUIDE OR SLEEVE
	PIPE EXPANSION JOINT
	PIPE ANCHOR
	VACUUM RELIEF VALVE
	THERMOMETER
	PRESSURE GAUGE
FS	FLOW SENSOR
	FLOOR DRAIN
	FLOOR SINK-FULL-3/4-HALF GRATE
	DRAIN ABOVE
	ROOF DRAIN
	ROOF DRAIN – OVERFLOW
	DOWNSPOUT NOZZLE
	CLEANOUT – VERTICAL
	CLEANOUT – HORIZONTAL
W H	WALL HYDRANT, HOSE BIBB

PROJECT DESCRIPTION

THIS PROJECT CONSISTS OF AN ADDITION OF A COMMUNITY CENTER TO THE LOGAN COUNTY FAIRGROUNDS IN STERLING, CO.

NEW LAVATORIES, WATER CLOSETS, HOSE BIBBS, AND A JANITORS CLOSET WILL BE INSTALLED AS PART OF THE PLUMBING SCOPE OF THE PROJECT. DOMESTIC WATER PIPING, HOT WATER PIPING, WASTE, AND VENT DESIGN SERVICES WILL BE PROVIDED. ADDITIONALLY, GAS PIPING WILL BE INCLUDED TO SERVE A NEW AIR HANDLING UNIT (SEE MECHANICAL FOR MORE DETAIL) AND A NEW SEALED COMBUSTION WATER HEATER.

SPECIFICATION GENERAL NOTES

GENERAL NOTES:

A. REVIEW THE CONTRACT CONDITIONS AND GENERAL REQUIREMENTS FOR INFORMATION THAT APPLIES.

B. THE WORD "PROVIDE" IS USED TO MEAN "FURNISH AND INSTALL."

C. PROVIDE ALL ITEMS FOR A COMPLETE AND SUCCESSFUL OPERATION OF ALL SYSTEMS SHOWN ON THESE DRAWINGS.

D. THE DRAWINGS ARE DIAGRAMMATIC AND INDICATE GENERAL ARRANGEMENT OF THE WORK. LOCATIONS ARE APPROXIMATE UNLESS DIMENSIONED. MINOR MODIFICATIONS IN LOCATION TO MEET SITE REQUIREMENTS ARE ACCEPTABLE. REFER TO LATEST ARCHITECTURAL DRAWINGS FOR EXACT WALL LOCATIONS AND DIMENSIONS.

E. THE ARCHITECTURAL AND ENGINEERING DRAWINGS ARE COMPLEMENTARY. GENERAL CONTRACTORS, SUBCONTRACTORS, AND VENDORS SHALL ACKNOWLEDGE ALL THE ARCHITECTURAL AS WELL AS ALL THE ENGINEERING DRAWINGS AND INCLUDE ALL WORK NECESSARY TO ACHIEVE A COMPLETE WORKING INSTALLATION FOR ALL DEVICES OR EQUIPMENT WHICH MAY BE SHOWN ON ONE DRAWING BUT NOT SHOWN ON ANOTHER. WHERE ELEMENTS ARE INDICATED OR DESCRIBED IN ANY DRAWING, IT IS THE INTENT THAT ALL RELATED CONSTRUCTION ASSOCIATED WITH SUCH ELEMENTS IS TO BE INCLUDED IN ORDER TO OBTAIN A COMPLETE INSTALLATION. FOR INSTANCE, IF A PIECE OF EQUIPMENT IS IDENTIFIED IN THE ARCHITECTURAL AND/OR MECHANICAL DRAWINGS, BUT THE ELECTRICAL CIRCUIT FOR SUCH EQUIPMENT IS NOT IDENTIFIED IN THE ELECTRICAL DRAWINGS, THE CONTRACTOR IS TO PROVIDE SUCH CIRCUIT IN ORDER TO HAVE FULLY OPERATIONAL EQUIPMENT. FOR ANOTHER EXAMPLE, IF A SINK IS INDICATED, IT IS THE INTENT THAT RELATED PLUMBING WORK INCLUDING DRAINS, VENT, PIPING, VALVES, ETC. ARE TO BE INCLUDED IN ORDER TO RESULT IN A FULLY OPERATIONAL SYSTEM. NO SUBCONTRACTOR SHALL BE ALLOWED TO EXCLUDE PORTIONS OF THE COMPLIMENTARY DRAWING SET.

F. LAY OUT ALL WORK IN ADVANCE. DO NOT DEFACE THE WORK OF OTHER TRADES OR THE EXISTING BUILDING.

G. LOCATION OF PIPES, DUCTS, SWITCHES, PANELS, EQUIPMENT, AND FIXTURES SHALL BE ADJUSTED TO ACCOMMODATE THE WORK OR INTERFERENCES ANTICIPATED AND ENCOUNTERED. DETERMINE THE EXACT ROUTE AND LOCATION OF EACH PIPE AND DUCT PRIOR TO FABRICATION.

G.A. RIGHT-OF-WAY: LINES WHICH PITCH SHALL HAVE THE RIGHT-OF-WAY OVER THOSE WHICH DO NOT PITCH. LINES WHOSE ELEVATIONS CANNOT BE CHANGED SHALL HAVE THE RIGHT-OF-WAY OVER LINES WHOSE ELEVATIONS CAN BE CHANGED.

G.B. OFFSETS, TRANSITIONS, AND CHANGES IN DIRECTION: OFFSETS, TRANSITIONS, AND CHANGES IN DIRECTION OF PIPES AND DUCTS SHALL BE MADE AS REQUIRED TO MAINTAIN PROPER HEADROOM AND PITCH OF SLOPING LINES WHETHER OR NOT INDICATED ON THE DRAWINGS.

G.C. FURNISH AND INSTALL ALL TRAPS, AIR VENTS, SANITARY VENTS, AND DEVICES AS REQUIRED TO EFFECT THESE OFFSETS, TRANSITIONS, AND CHANGES IN DIRECTION.

H. ALL PENETRATIONS OF FIRE RATED WALLS, FLOORS, AND CEILINGS SHALL HAVE THE SPACE AROUND PENETRATIONS SEALED WITH A FIRE BARRIER SEALANT MEETING THE REQUIREMENTS OF U.L. STANDARD 1479 AND ASTM-E 814. INSTALL SEALANT IN FULL COMPLIANCE WITH MANUFACTURER'S STANDARD INSTALLATION INSTRUCTIONS.

I. ALL MATERIALS LOCATED ABOVE CEILING SHALL BE SUITABLE FOR USE WITHIN A RETURN AIR PLENUM AS REQUIRED BY THE ADOPTED EDITION OF THE INTERNATIONAL MECHANICAL CODE.

J. WHEN USING A TORCH OR OTHER FLAME-PRODUCING DEVICE ON THIS PROJECT, CONTRACTOR SHALL PROVIDE ONE APPROVED FIRE EXTINGUISHER OR WATER HOSE EQUIPPED WITH A SUITABLE NOZZLE, SUFFICIENT IN LENGTH TO REACH ALL PORTIONS OF THE BUILDING AND CONNECTED TO A WATER SUPPLY ON THE PREMISES WHERE SAID BURNING OPERATION IS PERFORMED. COMBUSTIBLE MATERIAL IN THE CLOSE PROXIMITY OF OPEN FLAME SHALL BE PROTECTED AGAINST IGNITION BY SHIELDING, WETTING, OR OTHER MEANS. IN ALL CASED, A FIRE WATCH SHALL BE MAINTAINED IN THE VICINITY OF THE OPERATION BY THE CONTRACTOR FOR ONE-HALF HOUR AFTER THE TORCH OR FLAME-PRODUCING DEVICE HAS BEEN USED.

K. THE CONTRACTOR SHALL VISIT THE SITE PRIOR TO BIDDING THE PROJECT AND TAKE INTO CONSIDERATION CONDITIONS THAT MAY AFFECT THE WORK. NO ADDITIONAL COMPENSATION WILL BE APPROVED FOR FAILURE TO VISIT THE SITE PRIOR TO PRICING THE WORK.

L. MAINTAIN A CONTRACT SET OF THESE DRAWINGS AT THE SITE, WITH ALL CHANGES OR DEVIATIONS FROM THE ORIGINAL DRAWINGS NEATLY MARKED ON THEM IN RED COLOR. THIS SHALL BE A SEPARATE SET OF DRAWINGS NOT USED FOR CONSTRUCTION PURPOSES, WHICH SHALL BE KEPT UP TO DATE AS THE JOB PROGRESSES AND SHALL BE MADE AVAILABLE FOR INSPECTION BY THE ENGINEER AT ALL TIMES. UPON COMPLETION OF THE CONTRACT, THIS SET OF "AS-BUILTS" SHALL BE DELIVERED TO THE OWNER WITHIN 15 DAYS OF COMPLETION OF THE PROJECT.

M. MATERIAL SHALL BE AS SPECIFIED. SUBSTITUTIONS WILL BE CONSIDERED IF SUBMITTED FOR PRIOR APPROVAL AT LEAST ONE (1) WEEK PRIOR TO THE CONTRACT BID DATE. SUBSTITUTIONS SHOULD BE SUBMITTED SEPARATELY FOR EACH PRODUCT WITH SUPPORTING DATA, DRAWINGS AND SAMPLES AS APPROPRIATE, INCLUDING: 1.) COMPARISON OF THE QUALITIES OF THE PROPOSED SUBSTITUTION WITH THAT SPECIFIED. 2.) CHANGES REQUIRED IN OTHER ELEMENTS OF THE WORK BECAUSE OF THE SUBSTITUTION. 3.) COST DATA COMPARING THE PROPOSED SUBSTITUTION WITH THE PRODUCT SPECIFIED. THE ENGINEER WILL DETERMINE THE ACCEPTABILITY OF THE PROPOSED SUBSTITUTION.

N. SUBMIT ELECTRONIC PDF OF MANUFACTURER'S SHOP DRAWINGS FOR EQUIPMENT AND DEVICES. PRIOR TO SUBMITTING THE SHOP DRAWINGS FOR REVIEW, THE CONTRACTOR SHALL REVIEW AND CERTIFY SAME AS TO COMPLIANCE WITH THE PLANS AND SPECIFICATIONS AND FOR DIMENSIONAL SUITABILITY FOR THE APPLICATIONS.

O. WHEN ALTERNATE OR SUBSTITUTED EQUIPMENT IS USED, CONTRACTOR IS RESPONSIBLE FOR COORDINATING SPACE REQUIREMENTS, CONFIGURATIONS, CHANGES IN SUPPORTS OR STRUCTURAL MEMBERS, ELECTRICAL REQUIREMENTS, AND COORDINATION OF OTHER TRADES THAT MAY BE AFFECTED BY THEIR USE. CONTRACTOR IS RESPONSIBLE FOR VERIFYING THE SAME WHEN USING LISTED APPROVED MANUFACTURERS OTHER THAN THE BASIS OF DESIGN.

P. THE CONTRACTOR SHALL PROVIDE ALL EQUIPMENT AND PERSONNEL REQUIRED FOR TESTING OF INSTALLED EQUIPMENT.

Q. THE CONTRACTOR SHALL DEMONSTRATE THE PROPER OPERATION AND CALIBRATION OF ALL SYSTEMS TO THE OWNER, AT A TIME AS AGREED TO BY THE OWNER AND DIRECTED BY THE OWNER.

R. THE CONTRACTOR SHALL PROVIDE THE OWNER WITH OPERATION AND MAINTENANCE MANUALS FOR ALL SYSTEMS WITHIN 15 DAYS OF THE COMPLETION OF THE PROJECT.

S. THE CONTRACTOR SHALL INCLUDE THE COST FOR COMMISSIONING BY PCD ENGINEERING TO VERIFY THE PERFORMANCE OF THE SYSTEM CONTROLS SHOWN ON THIS DRAWING. THIS INCLUDES PREPARING A COMMISSIONING PLAN, VERIFYING THE OPERATION OF ALL SYSTEMS PER CODE REQUIREMENTS, AND PROVIDING A FINAL COMMISSIONING REPORT. FINAL COMMISSIONING REPORT IS DUE UPON COMPLETION OF THE PROJECT.

CODES, REGULATIONS, AND STANDARDS:

1. ALL WORK SHALL BE IN STRICT ACCORD WITH LOCAL GOVERNING LAWS, ORDINANCES, AND REGULATIONS; ALL WORK MUST BE IN FULL ACCORDANCE WITH ALL CODES, ORDINANCES, AND CODE RULINGS. CONTRACTOR SHALL PROVIDE, WITHOUT EXTRA CHARGE, THE LABOR AND MATERIALS REQUIRED FOR FULL CODE COMPLIANCE.
2. ALL MATERIALS SHALL BE NEW AND SHALL COMPLY WITH THE SPECIFICATIONS ON DRAWINGS.
3. CONTRACTOR SHALL OBTAIN AND PAY FOR ALL LOCAL FEES, PERMITS, AND SERVICES OF INSPECTION AUTHORITIES REQUIRED BY THE WORK OF THE PROJECT. THE CONTRACTOR SHALL ARRANGE FOR ALL INSPECTIONS WHEN THEY BECOME DUE AND SHALL NOT COVER NEW WORK UNTIL APPROVED BY THE INSPECTION AUTHORITY.

GUARANTEE:

A. THE CONTRACTOR SHALL GUARANTEE ALL WORKMANSHIP, MATERIALS, AND EQUIPMENT PROVIDED FOR THE PROJECT AGAINST DEFECTS AND/OR FAULTY WORKMANSHIP FOR A PERIOD OF ONE YEAR FROM THE DATE OF FINAL ACCEPTANCE BY THE OWNER.

B. THE CONTRACTOR SHALL REPAIR AND/OR REPLACE DEFECTIVE OR FAULTY WORKMANSHIP, MATERIALS, OR EQUIPMENT, AND SHALL BE RESPONSIBLE FOR THE REPAIR AND/OR REPLACEMENT OF OTHER PROPERTY OR WORK DAMAGED AS A RESULT, WITHOUT CHARGE TO THE OWNER AND AS QUICKLY AS POSSIBLE, DURING THE GUARANTEE PERIOD.

PLUMBING DRAWING INDEX

DRAWING NUMBER	DRAWING TITLE	ISSUE DATE – DESCRIPTION: 10-14-2022 – DD SET	12-16-2022 – BID/PERMIT
P01	PLUMBING LEGEND AND NOTES	●	●
P02	PLUMBING CONTROLS AND NOTES	●	●
P03	PLUMBING SCHEDULES	●	●
P04	PLUMBING DETAILS	●	●
P05	PLUMBING ISOMETRICS		●
P10	FIRST FLOOR PLUMBING PLAN – WASTE AND VENT	●	●
P11	FIRST FLOOR PLUMBING PLAN – WATER AND GAS	●	●

KEY:
● FULL SHEET ISSUE.
Ⓟ PARTIAL SHEET ISSUE (SKETCH).

THE DRAWINGS AND SPECIFICATIONS FOR THIS PROJECT ARE COPYRIGHT 2022, BOWMAN CONSULTING GROUP LTD., WHICH SHALL RETAIN ALL RIGHTS OF OWNERSHIP AND COPYRIGHT FOR THE INFORMATION AND DATA DESCRIBED HEREIN, WHETHER IN HARDCOPY OR ELECTRONIC FORMAT. THESE DOCUMENTS MAY NOT BE BID, REPRODUCED, OR COPIED FOR USE ON ANY OTHER PROJECT WITHOUT WRITTEN PERMISSION FROM BOWMAN CONSULTING GROUP LTD.

BUILDING CODE DATA

DISCIPLINE	CODE	EDITION
GENERAL	INTERNATIONAL BUILDING CODE	2006
HVAC / MECHANICAL	INTERNATIONAL MECHANICAL CODE	2006
PLUMBING	INTERNATIONAL PLUMBING CODE	2006
ELECTRICAL	NATIONAL ELECTRIC CODE	---
FIRE PROTECTION	INTERNATIONAL FIRE CODE	2006
	NFPA STANDARDS	---
FUEL	INTERNATIONAL FUEL GAS CODE	2006
ENERGY	INTERNATIONAL ENERGY CONSERVATION CODE	2006
ACCESSIBILITY	ICC/ANSI A117.1	2009
LOCAL AMENDMENTS	---	---

NOTES:
A. ALL WORK PERFORMED SHALL COMPLY WITH THE REQUIREMENTS OF THE LISTED CODES, LOCAL CODE AMENDMENTS, AND REFERENCED STANDARDS AS ENFORCED BY THE AUTHORITY HAVING JURISDICTION (AHJ).
B. ALL WORK SUBJECT TO INSPECTION BY THE AHJ AT THE PROJECT SITE FOR COMPLIANCE.

SPECIFICATION GENERAL NOTES CONTINUED

DEMOLITION NOTES:

1. VERIFY LOCATION OF EXISTING SYSTEMS AND EXISTING FIELD CONDITIONS.
2. REVIEW ALL SHEETS FOR OTHER DEMO AND REMOVAL REQUIREMENTS.
3. COORDINATE ALL DEMOLITION WORK WITH THE ARCHITECTURAL DRAWINGS.
4. ALL CONFLICTS, OMISSIONS, AND CONCERNS SHALL BE BROUGHT TO THE ATTENTION OF THE ENGINEER IN WRITING FOR A WRITTEN RESOLUTION, BEFORE PROCEEDING WITH WORK SO INVOLVED.
5. UNLESS SPECIFICALLY NOTED TO THE CONTRARY, REMOVED MATERIALS SHALL NOT BE REUSED IN THE WORK. SALVAGED MATERIALS THAT ARE TO BE REUSED SHALL BE STORED SAFE AGAINST DAMAGE AND TURNED OVER TO THE APPROPRIATE TRADE FOR REUSE.
6. WHERE INDICATED, SALVAGED MATERIALS SHALL REMAIN THE PROPERTY OF THE OWNER. THESE MATERIALS ARE TO BE REMOVED BY THE SUBCONTRACTOR AND TURNED OVER TO THE OWNER WITHOUT DAMAGE. ALL OTHER SALVAGED MATERIALS SHALL BECOME THE PROPERTY OF THE SUBCONTRACTOR, WHO SHALL REMOVE AND LEGALLY DISPOSE OF OR (PREFERABLY) RECYCLE THEM AWAY FROM THE PREMISES.
7. WORK THAT HAS BEEN CUT OR PARTIALLY REMOVED SHALL BE PROTECTED AGAINST DAMAGE UNTIL COVERED BY PERMANENT CONSTRUCTION.
8. INSPECT, CLEAN, AND RECONDITION ALL EQUIPMENT AND ACCESSORIES THAT ARE TO BE REUSED. REMOVE ALL MUD, DEBRIS, RUST AND OTHER EXTRANEOUS MATERIALS SO THAT THE EXISTING EQUIPMENT AND ALL ACCESSORIES CAN BE REPAINTED AND REPAIRED AS REQUIRED TO PLACE IN FIRST CLASS WORKING CONDITION.
9. WHERE EXISTING EQUIPMENT IS REMOVED, PIPING OR CONDUIT SHALL BE CAPPED UNDER THE FLOOR OR BEHIND THE WALL FACE, UNLESS OTHERWISE NOTED.
10. REPAIR ALL WALL, FLOOR, AND CEILING PENETRATIONS TO MAINTAIN THE EXISTING FIRE RATING AND FINISHES.

CAIRN DESIGN LLC
leading high performance building solutions
1805 Sheely Drive
Fort Collins, CO 80526
voice: (970)-286-7968
cairndesignllc.com

COLORADO REGISTERED PROFESSIONAL ENGINEER
PETER C. DAVIDSON
No. 33293

Bowman
323 3RD AVENUE, #100
LONGMONT, CO 80501
TEL: 1.303.678.1108
BOWMAN.COM

NOTICE: DUTY OF COOPERATION Release of these plans contemplates further coordination among the owner, his contractor(s), the architect and engineers. Design and construction are complex. Although the architect and his consultants have performed their services with due care and diligence, they cannot guarantee perfection. Communication is imperfect, and every contingency cannot be anticipated. Any ambiguity or discrepancy discovered by the use of these plans shall be reported immediately to the architect. Failure to notify the architect compounds misunderstanding and increases the cost of correcting the problem. Failure to notify the architect of a discrepancy shall result in the assumption of responsibility for all consequences. Changes made from the plans without consent of the architect are unauthorized, and shall relieve the architect/engineer of responsibility for all consequences caused by such changes.

BOWMAN PROJECT NO: 230325

PROJECT:
LOGAN COUNTY COMMUNITY CENTER ADDITION

SHEET TITLE:
PLUMBING LEGEND AND NOTES

ISSUE DATE:
12/16/22

REVISIONS:
10/14/22 DD SET
12/16/22 BID/PERMIT

PROJECT NO.:
2208

SHEET NO.
P01

As instruments of service, these drawings and the design represented are the permanent property of Cairn Design, LLC. Reproduction or use of these drawings other than for the project intended, without written consent from the Designer, is prohibited. Unauthorized use will be subject to legal action.

PLUMBING CONTROLS

1. THE PLUMBING SYSTEM CONTROLS ARE TO BE FULLY AUTOMATIC UNLESS OTHERWISE LISTED BELOW.
2. ALL CONTROL SYSTEMS SHALL BE DESIGNED AND PROVIDED BY A CONTROL MANUFACTURER WHO HAS BEEN IN THE BUSINESS OF MANUFACTURING, DESIGNING, AND INSTALLING CONTROL COMPONENTS FOR A MINIMUM OF TEN (10) YEARS.
3. COORDINATE WITH ELECTRICAL CONTRACTOR FOR INTERFACE WITH LINE VOLTAGE WIRING, CONNECTIONS, RELAYS, ETC.
4. SETPOINTS:
   - 4.1. WATER TEMPERATURE AT WATER HEATER DISCHARGE:
     - 4.1.1. 140 DEGREES FAHRENHEIT (ADJUSTABLE).
   - 4.1. MAXIMUM WATER TEMPERATURE AT LAVATORY OR HAND SINK FAUCET:
     - 4.1.1. 110 DEGREES FAHRENHEIT (ADJUSTABLE).
   - 4.1. WATER TEMPERATURE AT EMERGENCY EQUIPMENT DISCHARGE:
     - 4.1.1. 80 DEGREES FAHRENHEIT (ADJUSTABLE).
5. WATER HEATER:
   - 5.1. WATER HEATER SHALL HAVE INTEGRAL CONTROLS TO MAINTAIN TEMPERATURE SETPOINT.
   - 5.2. CONTROLS SHALL HAVE INTEGRAL FAULT DETECTION AND DIAGNOSTIC CAPABILITIES.
5. WATER HEATER CIRCULATION PUMP:
   - 5.1. PUMP SHALL BE CONTROLLED BY A TIMER TO RUN DURING BUILDING OCCUPIED PERIODS.
   - 5.2. AQUASTAT ON RETURN PIPE SHALL CYCLE PUMP TO MAINTAIN 135 DEGREES FAHRENHEIT (ADJUSTABLE).

PLUMBING COMMISSIONING:

1. A COMMISSIONING PLAN SHALL BE DEVELOPED BY A REGISTERED DESIGN PROFESSIONAL OR APPROVED AGENCY AND SHALL INCLUDE THE FOLLOWING ITEMS:
   - 1.1. A NARRATIVE DESCRIPTION OF THE ACTIVITIES THAT WILL BE ACCOMPLISHED DURING EACH PHASE OF COMMISSIONING, INCLUDING THE PERSONNEL INTENDED TO ACCOMPLISH EACH OF THE ACTIVITIES.
   - 1.2. A LISTING OF THE SPECIFIC EQUIPMENT, APPLIANCES, OR SYSTEMS TO BE TESTED AND A DESCRIPTION OF THE TESTS TO BE PERFORMED.
   - 1.3. FUNCTIONS TO BE TESTED INCLUDED, BUT NOT LIMITED TO, CALIBRATIONS AND ECONOMIZER CONTROLS.
   - 1.4. CONDITIONS UNDER WHICH THE TEST WILL BE PERFORMED. TESTING SHALL AFFIRM WINTER AND SUMMER DESIGN CONDITIONS AND FULL OUTSIDE AIR CONDITIONS.
   - 1.5. MEASURABLE CRITERIA FOR PERFORMANCE.
2. THE FOLLOWING PLUMBING SYSTEMS ARE TO BE COMMISSIONED:
   - 2.1. DOMESTIC HOT WATER HEATERS.
   - 2.2. DOMESTIC HOT WATER CIRCULATION SYSTEMS.

PLUMBING GENERAL NOTES

1. THE NEW PLUMBING SYSTEMS SHALL BE BY THE PLUMBING CONTRACTOR. THIS INCLUDES, BUT IS NOT LIMITED TO:
   - 1.1. THE PLUMBING FIXTURES AND EQUIPMENT AS SCHEDULED OR LISTED.
   - 1.2. THE WATER DISTRIBUTION SYSTEMS WITH: WATER SERVICE ENTRANCE, BACKFLOW PREVENTION, PRESSURE REGULATION, PIPING, VALVES, INSULATION, WATER HEATING EQUIPMENT, PUMPS, CONTROL SYSTEMS, ETC.
   - 1.3. THE WASTE AND VENT SYSTEMS WITH: PIPING, TRAPS, INTERCEPTORS, CLEANOUTS, VALVES, INSULATION, ETC.
   - 1.4. THE GAS DISTRIBUTION SYSTEMS WITH: GAS METER SERVICE ENTRANCE, PRESSURE REGULATION, PIPING, VALVES, EQUIPMENT CONNECTIONS, CONTROL SYSTEMS, ETC.
   - 1.5. THE ROOF DRAINAGE SYSTEMS WITH: ROOF DRAINS, PIPING, INSULATION, ACCESSORIES, ETC. FOR MAIN ROOF DRAINAGE AND OVERFLOW ROOF DRAINAGE SYSTEMS.
2. ALL PLUMBING SHALL BE IN ACCORDANCE WITH THE LOCAL PLUMBING CODES AND/OR ORDINANCES, INCLUDING, BUT NOT LIMITED TO PIPE SIZE.
3. CONTRACTOR SHALL MAINTAIN FULL RESPONSIBILITY FOR ALL DAMAGE CAUSED BY LEAKS IN PIPING SYSTEMS WHICH HE HAS BUILT OR MODIFIED IN ANY WAY. ALL DAMAGE SHALL BE REPAIRED OR REPLACED TO THE SATISFACTION OF THE OWNER.
4. PROJECT DESIGN CONDITIONS ARE:
   - 4.1. LOCATION: LOGAN COUNTY, COLORADO
   - 4.2. SITE ELEVATION: 3932 FEET.
   - 4.3. DOMESTIC WATER PROVIDED BY: STERLING COLORADO WATER DIVISION
     - 4.3.1. DESIGN CONDITIONS PER CITY WATER DEPARTMENT ARE:
       - 4.3.1.1. MINIMUM DESIGN WATER PRESSURE: 60 PSIG (CONTRACTOR TO VERIFY INLET WATER PRESSURE PRIOR TO INSTALLING PIPING.)
       - 4.3.1.2. MAXIMUM DESIGN WATER PRESSURE: 75
5. INSTALL ALL PIPING TRUE AND PLUMB, PARALLEL OR PERPENDICULAR TO BUILDING CONSTRUCTION. USE ONLY NEW MATERIALS, CLEAN AND FREE OF RUST.
6. PROVIDE DIELECTRIC UNIONS AT ALL PIPING CONNECTIONS OF DISSIMILAR METALS.
7. DOMESTIC WATER PIPING ABOVE GRADE;
   - 7.1. TYPE "L" HARD DRAWN COPPER WITH WROUGHT COPPER SWEAT FITTINGS. USE ONLY CANFIELD 100% WATERSAFE SOLDER (95% TIN, 4% COPPER, 1% SILVER) OR APPROVED EQUAL. DO NOT USE LEAD OR ANTIMONY SOLDERS.
8. DOMESTIC WATER PIPING BELOW GRADE – TYPE "K" SOFT DRAWN COPPER WITH WROUGHT COPPER BRAZED FITTINGS. USE ONLY CANFIELD BRAZESAFE 56 BRAZING ALLOY OR APPROVED EQUAL. DO NOT USE LEAD OR ANTIMONY BRAZING ALLOYS. INSTALL WITHOUT JOINTS WHERE POSSIBLE. IF JOINTS ARE REQUIRED, LOCATE THEM ON THE RECORD DRAWINGS WITH DIMENSIONS TO WALLS OR OTHER REFERENCE POINTS.
9. INSULATE DOMESTIC HOT WATER PIPING AND HOT WATER RECIRCULATION PIPING ABOVE GRADE WITH SNAP–ON TYPE FIBERGLASS PIPE INSULATION (1" THICK FOR PIPES 1–1/4" OF SMALLER AND 1–1/2" THICK FOR PIPES GREATER THAN OR EQUAL TO 1–1/2") WITH SELF SEALING ALL–SERVICE JACKET, FLAME RETARDANT. INSULATE DOMESTIC COLD WATER PIPING ABOVE GRADE WITH 1/2" THICK SNAP–ON TYPE FIBERGLASS PIPE INSULATION WITH SELF SEALING ALL–SERVICE JACKET, FLAME RETARDANT. ALL WATER VALVES AND FITTINGS SHALL BE INSULATED WITH MOLDED OR MITERED FIBERGLASS (SAME THICKNESS AS ASSOCIATED PIPING), FINISHED WITH A BRUSH COAT OF B.F. 30–35, 6 OZ. CANVAS AND A SECOND COAT OF SEALANT. NO STAPLES SHALL BE USED ON WATER PIPE INSULATION.
10. INTERIOR SOIL, WASTE, AND VENT PIPING ABOVE GRADE – SERVICE WEIGHT IRON SOIL PIPE AND NO–HUB FITTINGS, (PVC SCHEDULE–40 SOLID CORE PLASTIC PIPE AND FITTINGS MAY BE USED WHERE ALLOWED BY THE BUILDING DEPARTMENT AND NOT LOCATED IN NEW OR EXISTING RETURN AIR PLENUM.)
11. INTERIOR SOIL, WASTE, AND VENT PIPING BELOW GRADE – SERVICE WEIGHT CAST IRON HUB AND SPIGOT SOIL PIPE AND FITTINGS WITH NEOPRENE GASKETS. (PVC SCHEDULE–40 SOLID CORE PLASTIC PIPE AND FITTINGS MAY BE USED WHERE ALLOWED BY THE BUILDING DEPARTMENT.)
12. SLOPE ALL SANITARY WASTE LINES DOWN TOWARDS DRAIN. MINIMUM SLOPE EQUALS 1/4" PER LINEAR FOOT FOR PIPING 2–1/2" DIAMETER AND SMALLER; 1/8" PER LINEAR FOOT FOR ALL PIPING 3" DIAMETER AND LARGER. SLOPE ALL SANITARY VENT LINES TOWARD TRAP SERVED AT MINIMUM 1/10" PER LINEAR FOOT.
13. ALL REQUIRED SAWCUTTING, EXCAVATING, AND BACKFILLING SHALL BE PERFORMED BY PLUMBING CONTRACTOR FOR INSTALLATION OF NEW PLUMBING PIPING. CONCRETE FLOOR PATCHING SHALL BE PERFORMED BY G.C.
14. ALL CORE DRILLING THROUGH CONCRETE FLOORS, WALLS, OR ROOF SHALL BE PROCEED BY X–RAYING. THIS WORK IS THE RESPONSIBILITY OF THE CONTRACTOR.
15. GAS PIPING ABOVE GRADE 2" AND SMALLER SHALL BE THREADED SCHEDULE 40 STEEL PIPE WITH MALLEABLE IRON FITTINGS. ALL GAS PIPING ABOVE GRADE OVER 2" IN SIZE SHALL BE WELDED.
16. UNDERGROUND GAS PIPING SHALL BE POLYETHYLENE PIPE WITH TRACER WIRE. PROVIDE POLYETHYLENE/STEEL TRANSITION RISER AT EACH GROUND PENETRATION.
17. CONTRACTOR SHALL VERIFY GAS PRESSURE DELIVERED BY METER AT EXITING BUILDING (IF APPLICABLE). PROVIDE GAS PRESSURE REGULATOR AT GAS PIPING SUPPLY TO EACH PIECE OF CONNECTED EQUIPMENT IF GAS PRESSURE AT METER OUTLET EXCEEDS 7" W.C.
18. TEST THREADED NATURAL GAS PIPING AT 20 PSIG FOR A TEST PERIOD OF 2 HOURS. TEST PRESSURE SHALL NOT FALL OVER 5% DURING TEST PERIOD TO PASS. IF PIPING FAILS TEST, INVESTIGATE AND REPAIR THE SOURCE OF LEAKAGE AND REPEAT TEST.
19. ALL NEW EXTERIOR GAS PIPING SHALL BE PAINTED WITH AN ENAMEL CORROSION–RESISTANT PAINT BY THE M.C. FOLLOWING PRESSURE TESTING OF GAS PIPING. COLOR TO MATCH BUILDING EXTERIOR.
20. ALL NATURAL GAS PIPING SHALL BE BUILT AND SUPPORTED IN COMPLIANCE WITH THE LATEST EDITION OF NFPA PAMPHLET 54.
21. INTERIOR ROOF DRAINAGE PIPING ABOVE GRADE – SERVICE WEIGHT IRON SOIL PIPE AND NO–HUB FITTINGS, (PVC SCHEDULE–40 SOLID CORE PLASTIC PIPE AND FITTINGS MAY BE USED WHERE ALLOWED BY THE BUILDING DEPARTMENT) AND NOT LOCATED IN AN AIR PLENUM.
22. INTERIOR ROOF DRAINAGE PIPING BELOW GRADE – SERVICE WEIGHT CAST IRON HUB AND SPIGOT SOIL PIPE AND FITTINGS WITH NEOPRENE GASKETS. (PVC SCHEDULE–40 SOLID CORE PLASTIC PIPE AND FITTINGS MAY BE USED WHERE ALLOWED BY THE BUILDING DEPARTMENT.)
23. INSULATE ALL NEW PIPING, DRAINS AND FITTINGS FOR ROOF DRAINAGE, INCLUDING OVERFLOW PIPING SYSTEMS, WITH 1/2". 75 DEGREE MEAN TEMPERATURE FOR ALL HORIZONTAL PIPING AND VERTICAL PIPING WITHIN 24 INCHES VERTICALLY OF THE ROOF DRAIN, OR AS OTHERWISE INDICATED.
24. ALL PIPE INSULATION MATERIALS SHALL CONFORM TO ASTM 84, NFPA 90A AND 255 AND UL 723 NOT TO EXCEED RATING OF 25 FLAME SPREAD AND 50 SMOKE DEVELOPED. ALL INSTALLED INSULATION SHALL MEET OR EXCEED ASHRAE STANDARD 90.1 AND IECC.
25. INSULATION EXPOSED OUTSIDE SHALL BE COVERED WITH AN ALUMINUM JACKET OR OTHER ENGINEER APPROVED COVER.
26. MOUNT LAVATORY AT REQUIRED ELEVATION FOR HANDICAP USAGE WHERE REQUIRED. INSULATE ALL EXPOSED PIPING PER ANSI/ICC A117.1. RE: ARCHITECTURAL DRAWINGS.
27. WEATHERPROOF ALL PLUMBING ROOF PENETRATIONS PER CODES AND ROOFING MANUFACTURER RECOMMENDATIONS (RE ARCHITECTURAL DRAWINGS). PLUMBING VENT PENETRATIONS SHALL BE CAST IRON AND ONE SIZE LARGER THAN REQUIRED VENT SIZE.
28. PROVIDE LINE SIZE SHUT–OFF VALVE, MALLEABLE UNION, AND 6" DIRT LEG ON ALL GAS EQUIPMENT.
29. ACCESSIBLE WATER HAMMER ARRESTERS SHALL BE PROVIDED AND INSTALLED ON WATER PIPING WITH QUICK CLOSING VALVES TO PREVENT PIPING SHOCK OR HAMMER.
30. ALL MATERIAL AND EQUIPMENT PROVIDED AND INSTALLED UNDER THIS SECTION SHALL BE NEW AND IN CLEAN AND BRIGHT CONDITION. THE CONTRACTOR SHALL TAKE ALL MEASURES NECESSARY TO ENSURE AND MAINTAIN THE QUALITY OF THE INSTALLATION. ALL PIPING SHALL BE FLUSHED WITH CLEAN WATER PRIOR TO BEING PLACED INTO SERVICE TO ENSURE THAT ALL RESIDUAL CUTTING OIL, SLAG, THREAD TAPE, FLUX OR DIRT HAS BEEN PURGED. IN ADDITION TO FLUSHING, THE DOMESTIC WATER PIPING SHALL BE STERILIZED TO ELIMINATE ALL CONTAMINATION IN ACCORDANCE WITH IPC RECOMMENDATIONS.
31. PROVIDE FREEZE PROTECTION FOR PIPING WITHIN UNHEATED SPACES.
32. ALL PIPING, EQUIPMENT, ETC. SHALL BE LABELED FOR IDENTIFICATION.
33. ALL SAFETY RELIEF VALVES SHALL BE PIPED TO NEAREST FLOOR SINK, OR OTHER APPROVED RECEPTOR. REDUCED PRESSURE BACKFLOW PREVENTORS SHALL BE PROVIDED WITH ATTACHED FUNNEL PIPED TO THE NEAREST FLOOR SINK, RECEPTOR, OR OUTSIDE WHERE A NUISANCE WILL NOT BE CREATED BY WATER OR ICE.
34. PRESSURE REDUCING VALVES SHALL BE INSTALLED ON ALL WATER SERVICES WHERE THE WATER PRESSURE EXCEEDS 80 PSI.
35. BACKFLOW PREVENTORS SHALL BE INSTALLED AND CERTIFIED BY PLUMBING CONTRACTOR PER THE LOCAL WATER UTILITY COMPANY REQUIREMENTS. PLUMBING CONTRACTOR SHALL PAY FOR ALL INSTALL AND CERTIFICATION COSTS.
36. ALL PIPING TO BE HUNG ON ADJUSTABLE SPLIT RING HANGERS OF SIMILAR MATERIAL AS THE PIPE UNLESS OTHERWISE NOTED. PIPING RACKED ON WALLS SHALL BE RACKED ON UNI–STRUT TYPE SUPPORTS. PIPE HANGER SPACING PER THE PLUMBING CODE REQUIREMENTS.
37. PROVIDE ALL CURBS, SUPPORTS, AND ANCHORS FOR MECHANICAL WORK. NO CHAIN, TAPE OR WIRE MAY BE USED FOR HANGING OR SUPPORTING.
38. RECEIVE, UNCRATE, ASSEMBLE, ENSURE, AND INSTALL ALL EQUIPMENT FURNISHED BY THIS CONTRACT (AND FURNISHED BY THE OWNER) IN CONFORMANCE TO MANUFACTURER'S STANDARD INSTALLATION INSTRUCTIONS.
39. THIS CONTRACTOR SHALL COORDINATE ALL PIPING PRIOR TO INSTALLATION.
40. PROVIDE SLEEVES AND COLLARS FOR ALL PIPES THROUGH WALL, FLOORS, AND CEILINGS. SEAL ALL EXTERNAL PENETRATIONS OF FIRE RATED WALL, FLOORS, AND CEILINGS WITH APPROVED FIRE STOP MATERIAL IN COMPLIANCE WITH ASTM E814 AND UL 1479. PROVIDE I–PC ESCUTCHEON–CHROME PLATED AT ALL PIPING PENETRATIONS OF FINISHED WALLS EXPOSED TO VIEW.
41. A MINIMUM CLEARANCE OF 30 INCHES SHALL BE PROVIDED AROUND ALL EQUIPMENT (I.E., WATER HEATERS, PUMPS, BOILERS, ETC.) FOR SERVICE AND MAINTENANCE.
42. TEST ALL PIPING SYSTEMS IN WHICH ANY ALTERATIONS HAVE BEEN MADE FOR COMPLIANCE WITH THE GOVERNING EDITION OF THE INTERNATIONAL PLUMBING AND FUEL/GAS CODE. DOMESTIC HOT AND COLD WATER PIPING SHALL BE SUBJECT TO 100 PSIG FOR A MINIMUM OF 24 HOURS, DOMESTIC WASTE AND VENT PIPING SHALL BE TESTED AT 10' STATIC HEAD FOR A PERIOD GREATER THAN 15 MINUTES. IF THE REQUIRED PRESSURE DROPS BY MORE THAN 5% DURING ITS TEST DURATION, INVESTIGATE THE SOURCE OF THE LEAK, REPAIR THE LEAK, AND RETEST THE SYSTEM FOR THE REQUIRED TEST PERIOD. INSPECT ALL W & V JOINTS WHILE UNDER PRESSURE AND REPAIR ALL LEAKS.
43. SEE PLUMBING CONTROLS THIS SHEET FOR TEMPERATURE CONTROLS REQUIREMENTS.
44. SEE PLUMBING COMMISSIONING THIS SHEET FOR COMMISSIONING REQUIREMENTS.

CAIRN DESIGN LLC
leading high performance building solutions

1805 Sheely Drive
Fort Collins, CO 80526

voice: (970)-286-7968

cairndesignllc.com

COLORADO REGISTERED
PETER C. DAVIDSON
33293
PROFESSIONAL ENGINEER

Bowman

323 3RD AVENUE, #100
LONGMONT, CO 80501
TEL: 1.303.678.1108

BOWMAN.COM

NOTICE: DUTY OF COOPERATION Release of these plans contemplates further coordination among the owner, his consultant(s), the architect and engineers. Design and construction are complex. Although the architect and his consultants have performed their services with due care and diligence, they cannot guarantee perfection. Communication is imperfect, and every contingency cannot be anticipated. Any ambiguity or discrepancy discovered by the use of these plans shall be reported immediately to the architect. Failure to notify the architect compounds misunderstanding and increases the cost of correction. Failure to notify the architect of a change in the plans shall relieve the architect of responsibility for all consequences. Changes made from the plans without consent of the architect are unauthorized, and shall relieve the architect/engineer of responsibility for all consequences caused by such changes.

BOWMAN PROJECT NO: 230325

PROJECT:

LOGAN COUNTY
COMMUNITY CENTER
ADDITION

SHEET TITLE:

PLUMBING
CONTROLS
AND NOTES

ISSUE DATE:

12/16/22

REVISIONS:

10/14/22 DD SET
12/16/22 BID/PERMIT

PROJECT NO.:
2208

SHEET NO.

P02

As instruments of service, these drawings and the design represented are the permanent property of Cairn Design, LLC. Reproduction or use of these drawings other than for the project intended, without written consent from the Designer, is prohibited. Unauthorized use will be subject to legal action.

PLUMBING FIXTURE SCHEDULE

TAG	FIXTURE	TYPE	MANUFACTURER/MODEL	FAUCET/FLUSH VALVE	WASTE (INCHES)	VENT (INCHES)	COLD WATER (INCHES)	HOT WATER (INCHES)	MISCELLANEOUS	NOTES
DF–1	DRINKING FOUNTAIN	BI–LEVEL	ELKAY MODEL LK4409BF	–	1–1/2	1–1/4	1/2	–	NON–FILTERED, NON–REFRIGERATED, STAINLESS	A
EWC–1	ELEC. WATER COOLER	BI–LEVEL	ELKAY EZSTL8LC	–	1–1/2	1–1/4	1/2	–	ADA, BARRIER FREE, LEAD–FREE, STAINLESS, BOTTLE FILLER, 8GPH, FILTERED, 115 V, 6.0 A	A
FD–1	FLOOR DRAIN	IN SLAB	ZURN Z415B	–	SEE PLANS	SEE PLANS	–	–	COATED CAST IRON BODY, ADJUSTABLE POLISHED NICKEL BRONZE TOP, ASME 112.3.1, DEEP SEAL P–TRAP WITH PROSET SYSTEMS TRAP GUARD TG33ZURN	A
GCO–1	GRADE CLEANOUT	–	ZURN ZN–1400–BZ	–	SEE PLANS	–	–	–	INSIDE CAULK, ADJUSTABLE CAST IRON TOP, BRONZE PLUG, SET IN SIDEWALK, 16"x16" OR 16" DIAMETER, 6" DEEP CONCRETE PAD	A
WH–1	WALL HYDRANT	–	WOODFORD MODEL 67	–	–	–	3/4	–	3/4" MALE HOSE THREAD, LOOSE KEY HANDLE, INTEGRAL FIELD TESTABLE BACKFLOW PREVENTER	C
LAV–1	LAVATORY	COUNTERTOP, ACCESSIBLE	KOHLER K–2196 PENNINGTON	DELTA 591–LGHGMHDF WITH 0.5 GPM AERATOR	1–1/2	1–1/4	1/2	1/2	WATTS USG–B TEMPERING VALVE SET AT 105 DEGREES F. (ADJ.), CHROME PLATED FINISH P–TRAP WITH CLEANOUT AND OFFSET GRID STRAINER, CONCEALED ARM WALL SUPPORT, "TRUEBRO LAV GUARD" INSULATION KIT	A, E, F
MSB–1	MOP SERVICE BASIN	–	FIAT MSB2424	FIAT 830AA, THREADED SPOUT W/ VACUUM BREAKER, WALL BRACE	3	1–1/2	3/4	3/4	24"x24"x10" MOLDED STONE, DOME STRAINER, STAINLESS STEEL BUMPER GUARDS ON OPEN SIDES	NONE
UR–1	URINAL	FLUSH VALVE, ACCESSIBLE	KOHLER K–5016–ET	ZURN ZER6003AV–CPM, < 0.5 GPF	2	1–1/4	3/4	–	–	F
WC–1	WATER CLOSET	TANK, ACCESSIBLE	KOHLER K–3949 HIGHLINE	–	3	2	1/2	–	1.28 GPF FLUSH TANK, WHITE VITREOUS CHINA, ELONGATED BOWL, BEMIS 1655SSCT SEAT, OPEN FRONT, LESS COVER, MINIMUM OF 1,000 MoP TEST PERFORMANCE, FLUSH HANDLE ON OPEN SIDE OF ROOM/STALL	E, F
WC–2	WATER CLOSET	TANK	KOHLER K–3949 HIGHLINE	–	3	2	1/2	–	1.28 GPF FLUSH TANK, WHITE VITREOUS CHINA, ELONGATED BOWL, BEMIS 1655SSCT SEAT, OPEN FRONT, LESS COVER, MINIMUM OF 1,000 MoP TEST PERFORMANCE, FLUSH HANDLE ON OPEN SIDE OF ROOM/STALL	E

GENERAL NOTES:
1. PIPE SIZES SHOWN ARE MINIMUM SIZE TO A SINGLE FIXTURE.
2. ALL FIXTURES LISTED ARE NOT NECESSARILY USED ON THIS PROJECT.

KEY NOTES:
A. WASTE PIPING BELOW GRADE SHALL BE A MINIMUM OF 2".
B. PROVIDE PRV SET AT 20 PSI AND PDI SIZE "A" WATER HAMMER ARRESTOR.
C. PROVIDE INDIVIDUAL BALL VALVE AT EACH HYDRANT OR HOSE BIBB.
D. INDIRECT DRAIN LINE SHALL MATCH SIZE OF SINK BOWL CONNECTION OR GREATER.
E. LOOSE KEY 1/4 TURN ANGLE STOP VALVES WITH CHROME PLATED BRASS OR BRAIDED STAINLESS STEEL SUPPLIES.
F. ANSI 117.1 APPROVED.

DOMESTIC WATER HEATER SCHEDULE

TAG	MANUFACTURER	MODEL	CAPACITY (GALLONS)	RECOVERY 100°F RISE (GPH)	FUEL	GAS OUTPUT (MBH)	EFFICIENCY FACTOR	GAS OUTPUT (MBH)	STORAGE TEMP (DEG F)	ELECTRICAL REQUIREMENTS VOLTAGE/ PHASE	ELECTRICAL REQUIREMENTS MCA	DIMENSIONS DxH (IN.)	OPER. WEIGHT (LB.)	NOTES
DWH–1	STATE	FORCE 90	50	86	GAS	76	94%	71.7	140	120/1	5	22X71	635	A–C

NOTES:
A. SHEET METAL DRAIN PAN.
B. ASME T&P RELIEF VALVE PIPED TO FLOOR SINK.
C. AMTROL ST–5 EXPANSION TANK.

EQUALS BY: AO SMITH, BOSCH, BRADFORD WHITE, LOCHINVAR, RHEEM.

GAS LOAD SCHEDULE

TAG	DESCRIPTION	INPUT EACH (SEA LEVEL MBH)	QUANTITY	TOTAL INPUT (SEA LEVEL MBH)	INLET PRESSURE	NOTES
AHU–1	NEW AIR HANDLER	800	1	800	–	C
HVAC SUBTOTAL:				800 MBH		
DWH–1	NEW DOM. WATER HEATER	76	1	76	–	C
DOMESTIC HOT WATER SUBTOTAL:				76 MBH		
–	FUTURE	210	1	210	–	C
DOMESTIC HOT WATER SUBTOTAL:				210 MBH		
			TOTAL CONNECTED LOAD =	1086 MBH		A, B, D

NOTES:
A. CONTRACTOR SHALL VERIFY EXISTING METER IS SUFFICIENT TO SUPPORT NEW LOAD. COORDINATE METER OR SERVICE UPGRADE WITH UTILITY COMPANY AND INCLUDE ALL COSTS IN BID.
B. FARTHEST CONNECTED DEVICE DISTANCE BASED ON 450 FEET.
C. PIPE SIZING BASED ON PRESSURE AT METER OR PRV OUTLET PRESSURE OF 6 INCHES OF WATER COLUMN, 0.3" WC PRESSURE DROP, SCHEDULE 40 METALLIC PIPE.
D. INPUT BASED ON EQUIPMENT SUPPLIED BY OTHERS. VERIFY EXACT LOAD WITH EQUIPMENT PROVIDED.

DOMESTIC HOT WATER CIRCULATOR PUMP SCHEDULE

TAG	MANUFACTURER	MODEL	SERVICE	LOCATION	TYPE	FLOW (GPM)	HEAD (FEET)	MCA	VOLTS/ PHASE	NOTES
RP–1	TACO	PLUM & PLUG	HW RECIRC	JAN	CIRCULATOR	1	5	0.57	120/1	1

NOTES:
1. PROVIDE WITH AQUASTAT AND TIMER.

EQUALS BY: BELL & GOSSETT, GRUNDFOS, WILO, ZOELLER.

CAIRN DESIGN LLC
leading high performance building solutions
1805 Sheely Drive
Fort Collins, CO 80526
voice: (970)-286-7968
cairndesignllc.com

COLORADO REGISTERED PROFESSIONAL ENGINEER
JEFFREY C. DAUGHTON
No. 33293

Bowman
323 3RD AVENUE, #100
LONGMONT, CO 80501
TEL: 1.303.678.1108
BOWMAN.COM

NOTICE: DUTY OF COOPERATION Release of these plans contemplates further coordination among the owner, his contractor(s), the architect and engineers. Design and construction are complex. Although the architect and his consultants have performed their services with due care and diligence, they cannot guarantee perfection. Communication is imperfect, and every contingency cannot be anticipated. Any ambiguity or discrepancy discovered by the use of these plans shall be reported immediately to the architect. Failure to notify the architect compounds misunderstanding and increases the cost of correction. Failure to notify the architect of a defect in the plans shall release the architect from responsibility for all consequences. Changes made from the plans without consent of the architect are unauthorized, and shall relieve the architect/engineer of responsibility for all consequences caused by such changes.

BOWMAN PROJECT NO: 230325

PROJECT:

LOGAN COUNTY
COMMUNITY CENTER
ADDITION

SHEET TITLE:

PLUMBING
SCHEDULES

ISSUE DATE:

12/16/22

REVISIONS:

10/14/22 DD SET
12/16/22 BID/PERMIT

PROJECT NO.:
2208

SHEET NO.

P03

As instruments of service, these drawings and the design represented are the permanent property of Cairn Design, LLC. Reproduction or use of these drawings other than for the project intended, without written consent from the Designer, is prohibited. Unauthorized use will be subject to legal action.

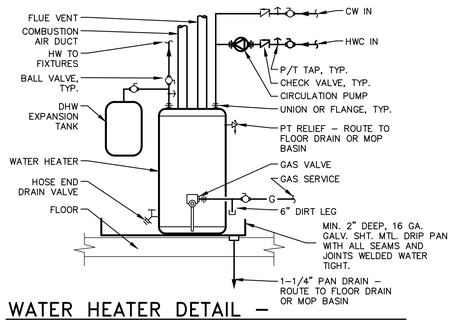

WATER HEATER DETAIL – GAS WITH CIRCULATION

SCALE: NO SCALE

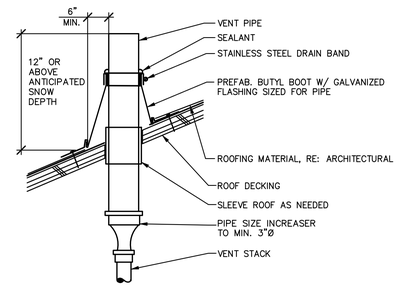

VENT THROUGH ROOF DETAIL

SCALE: NO SCALE

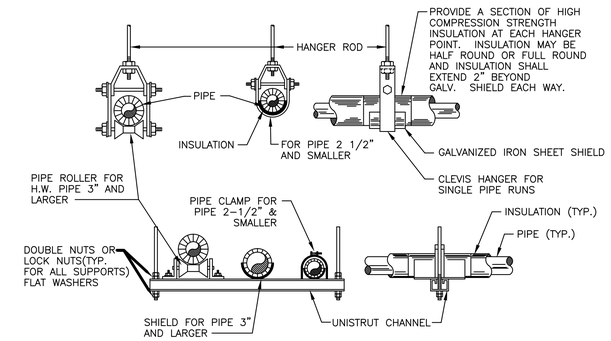

WATER PIPING HANGERS/SUPPORTS DETAIL

SCALE: NO SCALE

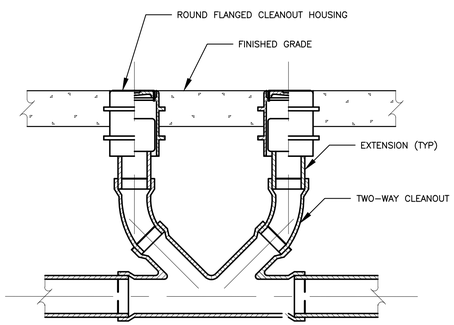

TWO-WAY GRADE CLEANOUT DETAIL

SCALE: NO SCALE

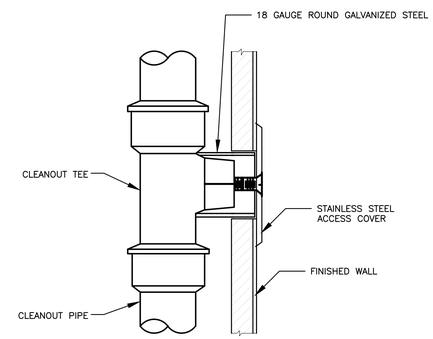

WALL CLEANOUT DETAIL

SCALE: NO SCALE

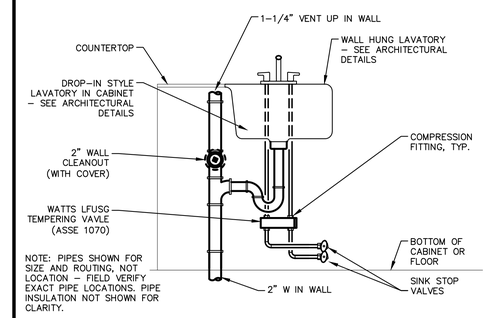

LAVATORY WITH TEMPERING VALVE DETAIL

SCALE: NO SCALE

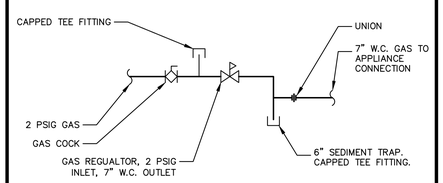

NOTE: PROVIDE GAS LIMITING REGULATOR(S) FOR INSIDE THE BUILDING.

GAS REGULATOR DETAIL

SCALE: NO SCALE

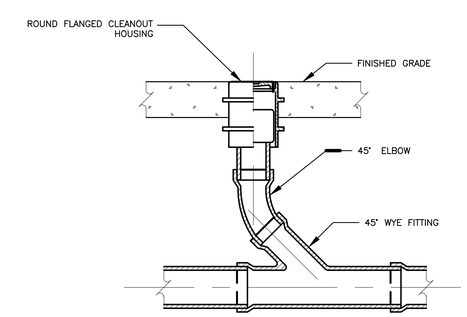

GRADE CLEANOUT DETAIL

SCALE: NO SCALE

CAIRN DESIGN LLC
leading high performance building solutions
1805 Sheely Drive
Fort Collins, CO 80526
voice: (970)-286-7968
cairndesignllc.com

COLORADO REGISTERED PROFESSIONAL ENGINEER
JAMES C. DAVIDSON
No. 33293

Bowman
323 3RD AVENUE, #100
LONGMONT, CO 80501
TEL: 1.303.678.1108
BOWMAN.COM

NOTICE: DUTY OF COOPERATION Release of these plans contemplates further coordination among the owner, his contractor(s), the architect and engineers. Design and construction are complex. Although the architect and his consultants have performed their services with due care and diligence, they cannot guarantee perfection. Communication is imperfect, and every contingency cannot be anticipated. Any ambiguity or discrepancy discovered by the use of these plans shall be reported immediately to the architect. Failure to notify the architect compounds misunderstanding and increases the cost of correction. Contractors are responsible for the coordination of their work and shall be responsible for all consequences. Changes made from the plans without consent of the architect are unauthorized, and shall relieve the architect/engineer of responsibility for all consequences caused by such changes.

BOWMAN PROJECT NO: 230325

PROJECT:

LOGAN COUNTY COMMUNITY CENTER ADDITION

SHEET TITLE:

PLUMBING DETAILS

ISSUE DATE:

12/16/22

REVISIONS:

10/14/22 DD SET
12/16/22 BID/PERMIT

PROJECT NO.:
2208

SHEET NO.

P04

As instruments of service, these drawings and the design represented are the permanent property of Cairn Design, LLC. Reproduction or use of these drawings other than for the project intended, without written consent from the Designer, is prohibited. Unauthorized use will be subject to legal action.

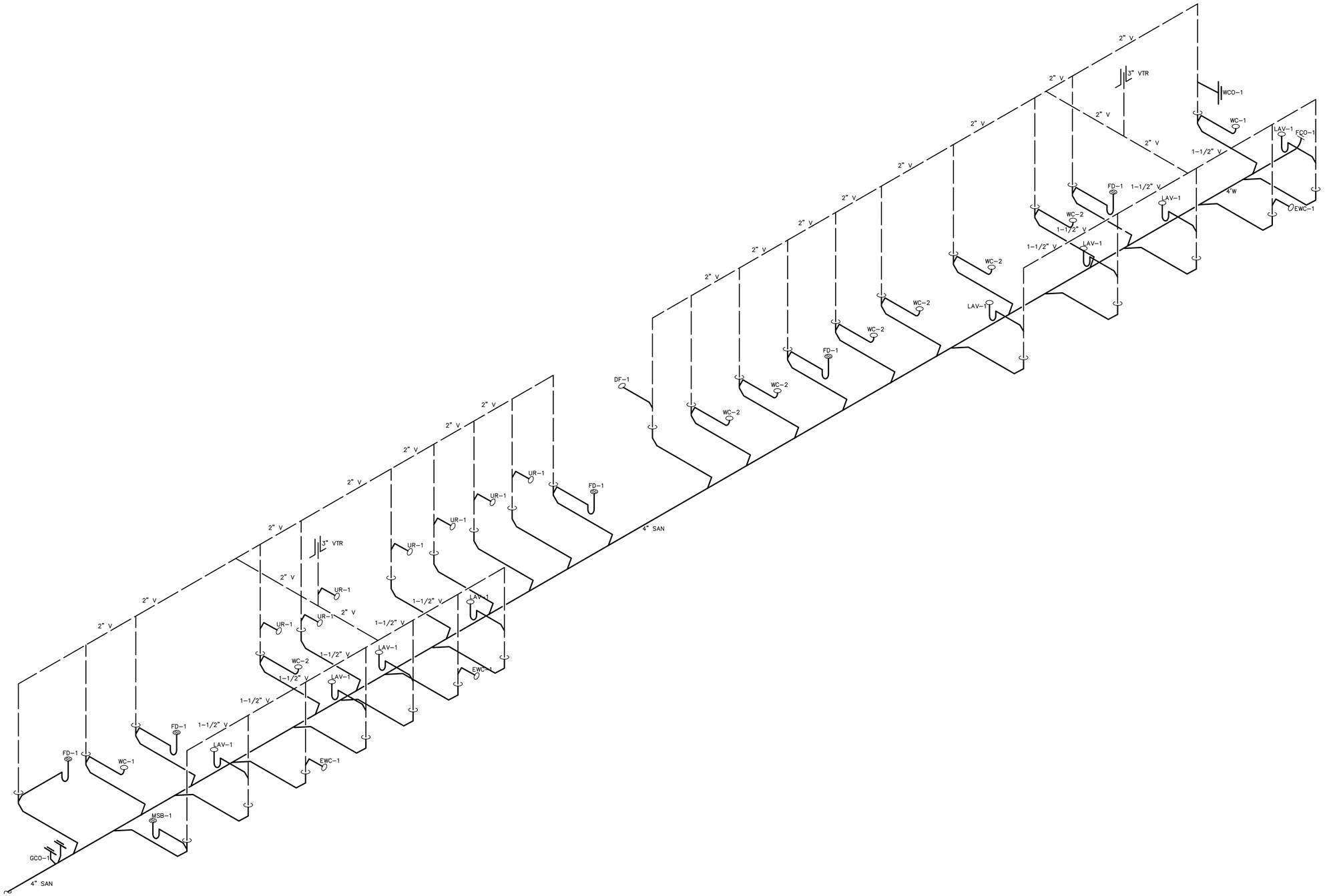

PLUMBING WASTE AND VENT ISOMETRIC

CAIRN DESIGN LLC
leading high performance building solutions

1805 Sheely Drive
Fort Collins, CO 80526

voice: (970)-286-7968

cairndesignllc.com

COLORADO REGISTERED
TYLER C. DAVIDSON
No. 33293
PROFESSIONAL ENGINEER

Bowman

323 3RD AVENUE, #100
LONGMONT, CO 80501
TEL: 1.303.678.1108

BOWMAN.COM

NOTICE: DUTY OF COOPERATION Release of these plans contemplates further coordination among the owner, his consultant(s), the architect and engineers. Design and construction are complex. Although the architect and his consultants have performed their services with due care and diligence, they cannot guarantee perfection. Communication is imperfect, and every contingency cannot be anticipated. Any ambiguity or discrepancy discovered by the use of these plans shall be reported immediately to the architect. Failure to notify the architect compounds misunderstanding and increases the cost of correction. Failure to notify the architect of a defect in the plans shall relieve the architect of responsibility for all consequences. Changes made from the plans without consent of the architect are unauthorized, and shall relieve the architect/engineer of responsibility for all consequences caused by such changes.

BOWMAN PROJECT NO: 230325

PROJECT:

LOGAN COUNTY
COMMUNITY CENTER
ADDITION

SHEET TITLE:

PLUMBING ISOMETRICS

ISSUE DATE:

12/16/22

REVISIONS:

10/14/22 DD SET
12/16/22 BID/PERMIT

PROJECT NO.:
2208

SHEET NO.

P05

As instruments of service, these drawings and the design represented are the permanent property of Cairn Design, LLC. Reproduction or use of these drawings other than for the project intended, without written consent from the Designer, is prohibited. Unauthorized use will be subject to legal action.

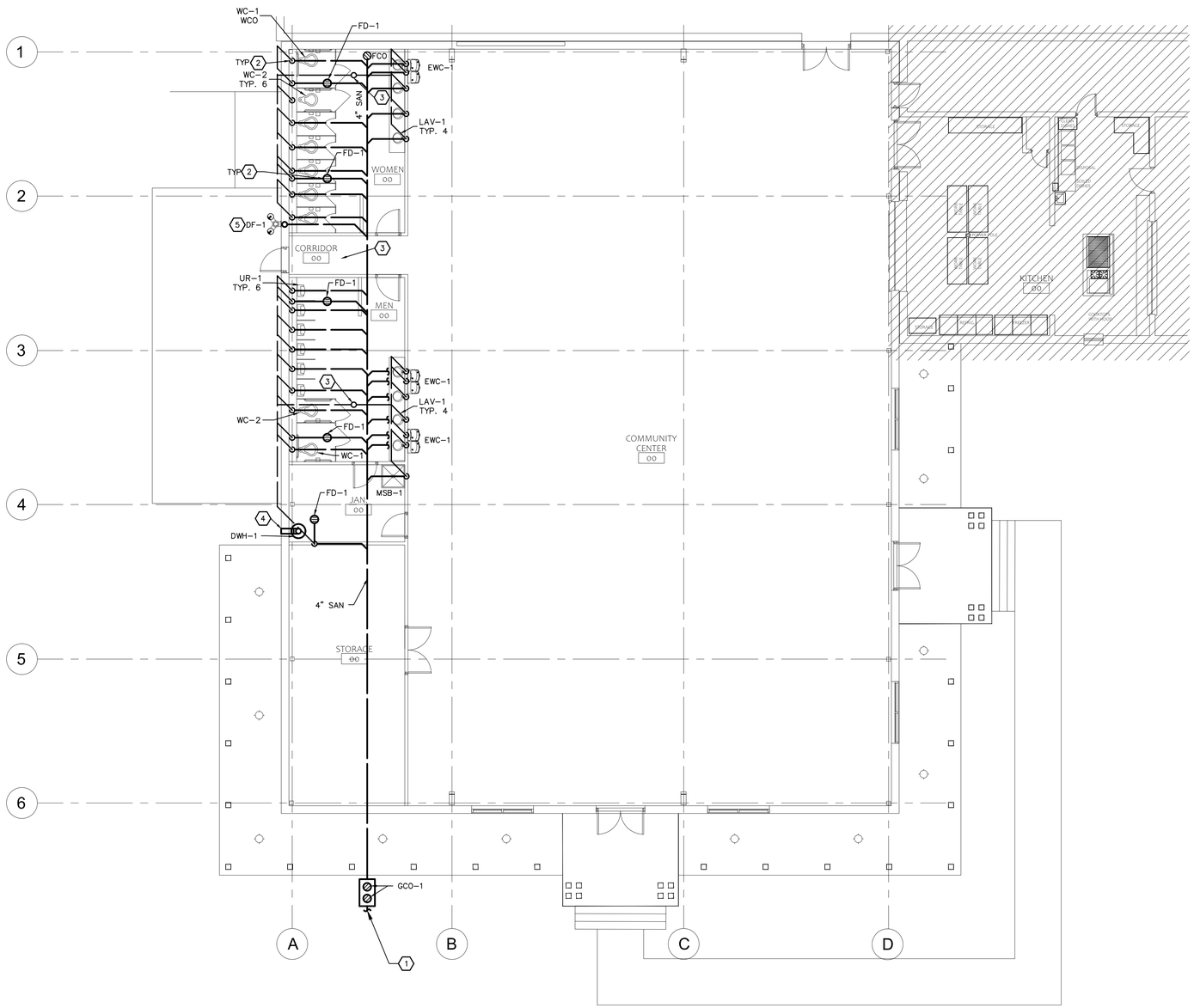

1 / P10 FIRST FLOOR PLUMBING PLAN – WASTE AND VENT

SCALE: 1/8"=1'-0"

NORTH

GENERAL NOTES:

1. SEE WASTE/VENT ISOMETRIC FOR MORE INFORMATION ON WASTE/VENT ROUTING.
2. SEE PLUMBING FIXTURE SCHEDULE FOR PIPE SIZES TO INDIVIDUAL FIXTURES.
3. EXISTING PLUMBING SYSTEM HAS BEEN FIELD VERIFIED TO THE EXTENT POSSIBLE WITHOUT DEMOLITION OF OTHERWISE USEABLE BUILDING CONSTRUCTION. LAYOUT OF EXISTING PIPING INDICATES ASSUMED PIPING ARRANGEMENT FOR ALL EXISTING PIPING LOCATED BELOW EXISTING CONCRETE SLAB. PLUMBING CONTRACTOR SHALL INCLUDE REASONABLE ALLOWANCE FOR VARIATIONS TO THE EXISTING LAYOUT DISCOVERED DURING CONSTRUCTION AND SHALL COMPLETE NEW CONSTRUCTION IN ACCORDANCE WITH DESIGN INTENT INDICATED.

WORK NOTES: (X)

1. PROVIDE NEW 4" SANITARY LINE, SLOPED AT 1/8" PER LINEAR FOOT. SEE CIVIL FOR CONTINUATION. MINIMUM INVERT ELEVATION BELOW THE FROST LINE, COORDINATE WITH CIVIL.
2. 2" WASTE UP.
3. 3" VTR.
4. PROVIDE CONCENTRIC VENT/FLUE PIPE PER MANUFACTURER'S RECOMMENDATIONS. KEEP 10' CLEAR FROM ANY OUTSIDE AIR OPENINGS.
5. DO NOT PROVIDE TRAP FOR EXTERIOR DRINKING FOUNTAIN FOR FREEZE PROTECTION PURPOSES.

CAIRN DESIGN LLC
leading high performance building solutions

1805 Sheely Drive
Fort Collins, CO 80526

voice: (970)-286-7968

cairndesignllc.com

COLORADO REGISTERED
PETER C. DAVIDSON
No. 33293
PROFESSIONAL ENGINEER

Bowman

323 3RD AVENUE, #100
LONGMONT, CO 80501
TEL: 1.303.678.1108

BOWMAN.COM

NOTICE: DUTY OF COOPERATION Release of these plans contemplates further coordination among the owner, his contractor(s), the architect and engineers. Design and construction are complex. Although the architect and his consultants have performed their services with due care and diligence, they cannot guarantee perfection. Communication is imperfect, and every contingency cannot be anticipated. Any ambiguity or discrepancy discovered by the use of these plans shall be reported immediately to the architect. Failure to notify the architect compounds misunderstanding and increases the difficulty of correcting the problem. Changes made from the plans without consent of the architect are unauthorized, and shall relieve the architect/engineer of responsibility for all consequences caused by such changes.

BOWMAN PROJECT NO: 230325

PROJECT:

LOGAN COUNTY
COMMUNITY CENTER
ADDITION

SHEET TITLE:

FIRST FLOOR
PLUMBING PLAN
WASTE AND VENT

ISSUE DATE:

12/16/22

REVISIONS:

10/14/22 DD SET
12/16/22 BID/PERMIT

PROJECT NO.:
2208

SHEET NO.

P10

As instruments of service, these drawings and the design represented are the permanent property of Cairn Design, LLC. Reproduction or use of these drawings other than for the project intended, without written consent from the Designer, is prohibited. Unauthorized use will be subject to legal action.

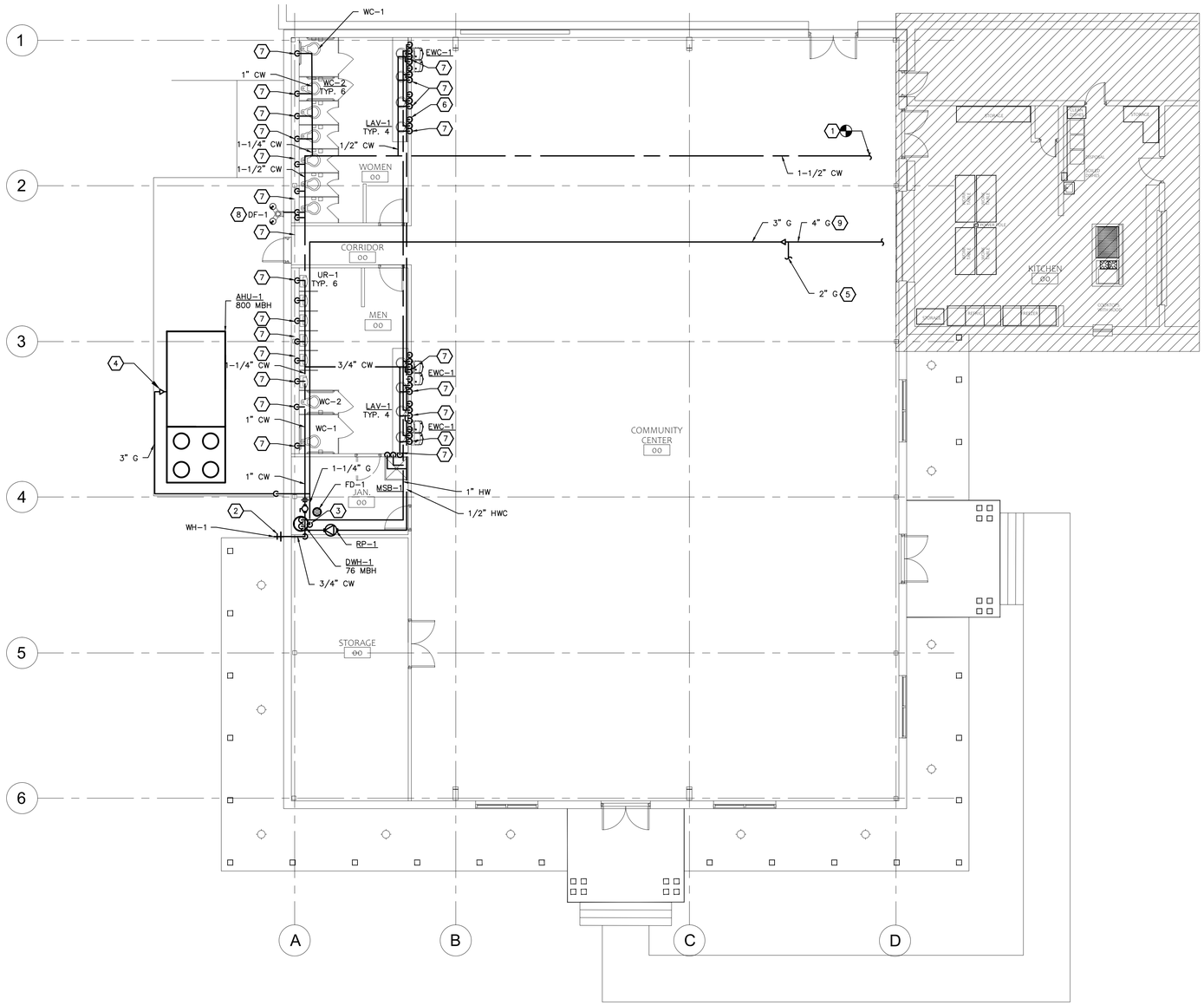

1 / P11 FIRST FLOOR PLUMBING PLAN – WATER AND GAS

SCALE: 1/8"=1'-0"

NORTH

GENERAL NOTES:

1. SEE PLUMBING FIXTURE SCHEDULE FOR PIPE SIZES TO INDIVIDUAL FIXTURES.
2. EXISTING PLUMBING SYSTEM HAS BEEN FIELD VERIFIED TO THE EXTENT POSSIBLE WITHOUT DEMOLITION OF OTHERWISE USEABLE BUILDING CONSTRUCTION. LAYOUT OF EXISTING PIPING INDICATES ASSUMED PIPING ARRANGEMENT FOR ALL EXISTING PIPING LOCATED BELOW EXISTING CONCRETE SLAB. PLUMBING CONTRACTOR SHALL INCLUDE REASONABLE ALLOWANCE FOR VARIATIONS TO THE EXISTING LAYOUT DISCOVERED DURING CONSTRUCTION AND SHALL COMPLETE NEW CONSTRUCTION IN ACCORDANCE WITH DESIGN INTENT INDICATED.
3. PROVIDE PERMANENT OR TEMPORARY CAPS ON ALL NATURAL GAS PIPING AS PROJECT PROGRESSES. DO NOT LEAVE UNCAPPED GAS PIPING UNATTENDED.

WORK NOTES: (X)

1. CONNECT NEW 1-1/2" CW LINE TO EXISTING 1-1/2" CW LINE, JUST DOWNSTREAM OF EXISTING 1-1/2" BACK FLOW PREVENTER. COORDINATE WITH OWNER PRIOR TO SHUTDOWN OF WATER SERVICE FOR INSTALLATION OF NEW PLUMBING LINE. MINIMUM DESIGN PRESSURE AT TAP OF NEW LINE IS 60PSIG. REFER TO ARCHITECTURAL KEY PLAN DRAWING FOR LOCATION.
2. PROVIDE NEW FREEZE-PROOF WALL HYDRANT WITH AN ACCESSIBLE SHUT OFF VALVE.
3. CONNECT NEW 1-1/4" GAS LINE WITH 6" SEDIMENT TRAP AND SHUT OFF VALVE TO NEW GAS FIRED WATER HEATER.
4. REDUCE TO UNIT CONNECTION SIZE AT INLET CONNECTION.
5. 2" GAS LINE WITH SHUT OFF VALVE FOR FUTURE KITCHEN REMODEL. ESTIMATED 210 MBH.
6. CONNECT 1/2" HWC WITHIN 2' OF HW CONNECTION, TYP ALL LAVS.
7. CW DOWN TO FIXTURE IN FURRED-OUT WALL (RE: ARCH). SEE PLUMBING SCHEDULE FOR CONNECTION SIZE.
8. EXTERIOR DRINKING FOUNTAIN MUST BE WINTERIZED FOR FREEZE PROTECTION. PROVIDE WITH PROVISIONS FOR WINTERIZATION INCLUDING BUT NOT LIMITED TO A SHUT OFF VALVE AND A STRAINER WITH BLOW OUT.
9. PROVIDE NEW 4" GAS LINE, CONNECT TO EXISTING METER NEAR EAST SIDE OF ARENA. REFER TO ARCHITECTURAL KEY PLAN DRAWING FOR LOCATION.

CAIRN DESIGN LLC
leading high performance building solutions

1805 Sheely Drive
Fort Collins, CO 80526

voice: (970)-286-7968

cairndesignllc.com

COLORADO REGISTERED PROFESSIONAL ENGINEER
PETER C. DALTON
No. 33293

Bowman

323 3RD AVENUE, #100
LONGMONT, CO 80501
TEL: 1.303.678.1108

BOWMAN.COM

NOTICE: DUTY OF COOPERATION Release of these plans contemplates further coordination among the owner, his contractor(s), the architect and engineers. Design and construction are complex. Although the architect and his consultants have performed their services with due care and diligence, they cannot guarantee perfection. Communication is imperfect, and every contingency cannot be anticipated. Any ambiguity or discrepancy discovered by the use of these plans shall be reported immediately to the architect. Failure to notify the architect compounds misunderstanding and increases the difficulty of resolving the problem. Failure to notify the architect of a discrepancy shall result in the sole responsibility for all consequences. Changes made from the plans without consent of the architect are unauthorized, and shall relieve the architect/engineer of responsibility for all consequences caused by such changes.

BOWMAN PROJECT NO: 230325

PROJECT:

LOGAN COUNTY
COMMUNITY CENTER
ADDITION

SHEET TITLE:

FIRST FLOOR
PLUMBING PLAN
WATER AND GAS

ISSUE DATE:

12/16/22

REVISIONS:

10/14/22 DD SET
12/16/22 BID/PERMIT

PROJECT NO.:
2208

SHEET NO.

P11

As instruments of service, these drawings and the design represented are the permanent property of Cairn Design, LLC. Reproduction or use of these drawings other than for the project intended, without written consent from the Designer, is prohibited. Unauthorized use will be subject to legal action.

MECHANICAL LEGEND

SYMBOL	ABBREVIATION	DESCRIPTION
	(E)	EXISTING (LIGHT LINE)
	(D) DEMO	TO BE DEMOLISHED
	(N)	NEW (HEAVY LINE)
CHR	CHR	DUAL TEMPERATURE RETURN
CHS	CHS	DUAL TEMPERATURE SUPPLY
CR	CR	CHILLED WATER RETURN
CS	CS	CHILLED WATER SUPPLY
CWR	CWR	CONDENSER WATER RETURN
CWS	CWS	CONDENSER WATER SUPPLY
HWR	HWR	HEATING WATER RETURN
HWS	HWS	HEATING WATER SUPPLY
HPC	HPC	HIGH PRESSURE CONDENSATE
HPS	HPS	HIGH PRESSURE STEAM
LPC	LPC	LOW PRESSURE CONDENSATE
LPS	LPS	LOW PRESSURE STEAM
MPC	MPC	MEDIUM PRESSURE CONDENSATE
MPS	MPS	MEDIUM PRESSURE STEAM
PC	PC	PUMPED CONDENSATE
RD	RD	REFRIGERANT DISCHARGE
RL	RL	REFRIGERANT LIQUID
RS	RS	REFRIGERANT SUCTION
	CW	DOMESTIC COLD WATER
	HW	DOMESTIC HOT WATER
	HWC	DOMESTIC HOT WATER CIRCULATION
A	A	AIR PIPING (COMPRESSED)
D	D	DRAIN
DIC	DIC	DE-IONIZED WATER CIRCULATION
F	F	FIRE
FOR	FOR	FUEL OIL RETURN
FOS	FOS	FUEL OIL SUPPLY
FOV	FOV	FUEL OIL VENT
G	G	GAS
GW	GW	GREASE WASTE
IW	IW	INDIRECT WASTE
MA	MA	MEDICAL AIR
N	N	NITROGEN
ORDL	ORDL	OVERFLOW ROOF DRAIN LEADER
O	OXY	OXYGEN
RDL	RDL	ROOF DRAIN LEADER
SAN	SAN	SANITARY WASTE
SMS	SMS	SNOW MELT SUPPLY
SMR	SMR	SNOW MELT RETURN
SOD	SOD	SAND AND OIL DRAIN
ST	ST	STORM
VAC	VAC	VACUUM
V	V	VENT
W	W	WASTE
	AFF	ABOVE FINISHED FLOOR
	AFG	ABOVE FINISHED GRADE
	BFF	BELOW FINISHED FLOOR
	DWV	DOMESTIC WASTE & VENT
	EC	ELECTRICAL CONTRACTOR
	EOR	ENGINEER OF RECORD
	GC	GENERAL CONTRACTOR
	MC	MECHANICAL CONTRACTOR
	PC	PLUMBING CONTRACTOR
	ER	EXISTING RETURN AIR DEVICE
	ES	EXISTING SUPPLY AIR DEVICE
	ET	EXISTING TRANSFER AIR DEVICE
	RR	RELOCATED RETURN AIR DEVICE
	RS	RELOCATED SUPPLY AIR DEVICE
	RT	RELOCATED TRANSFER AIR DEVICE
	TA	TRANSFER AIR

SYMBOL	DESCRIPTION
	PIPE UP AND DOWN ELBOW
	PIPE DOWN TEE
	PIPE CONTINUATION
	PIPE FLOW DIRECTION (SHOWN TO RIGHT)
	PIPE REDUCER
	PIPE UNION AND CAP
	BALL VALVE, GATE VALVE
	MOTORIZED VALVE – 2-WAY
	MOTORIZED VALVE – 3-WAY
	PRESSURE REDUCING VALVE
	CHECK VALVE
	BUTTERFLY VALVE, GLOBE VALVE
	BALANCE VALVE
	STRAINER
	HOSE-END DRAIN VALVE
	STRAINER WITH BLOW-OFF
	VENTURI
	GAS COCK
	PUMP
	DUAL CHECK BACKFLOW PREVENTOR
	REDUCED PRESSURE BACKFLOW PREVENTOR
	PRESSURE-TEMPERATURE TAP
	PRESSURE-TEMPERATURE RELIEF VALVE
	AIR VENT
	PIPE GUIDE OR SLEEVE
	PIPE EXPANSION JOINT
	PIPE ANCHOR
	VACUUM RELIEF VALVE
	THERMOMETER
	PRESSURE GAUGE
FS	FLOW SENSOR
	FLOOR DRAIN
	FLOOR SINK-FULL-3/4-HALF GRATE
	DRAIN ABOVE
	ROOF DRAIN
	ROOF DRAIN – OVERFLOW
	DOWNSPOUT NOZZLE
	CLEANOUT – VERTICAL
	CLEANOUT – HORIZONTAL
W H	WALL HYDRANT, HOSE BIBB

SYMBOL	DESCRIPTION
	SMOKE DETECTOR
20/16	DUCT SIZE INDICATING SHEET METAL DIMENSIONS. FIRST NUMBER WIDTH AND SECOND IS DEPTH (INCHES).
	DUCT ELBOW WITH TURNING VANE
	DUCT TEE WITH TURNING VANES
	MANUAL DAMPER WITH LOCKING QUADRANT.
M	MOTORIZED DAMPER
	FLEXIBLE DUCT CONNECTOR
	SPIN-IN FITTING WITH DAMPER
	45° DUCT TAKE-OFF
	RECTANGULAR SUPPLY AIR DUCT UP
	RECTANGULAR RETURN AIR DUCT UP
	RECTANGULAR EXHAUST AIR DUCT UP
	ROUND DUCT UP
U.C. SIZE	DOOR UNDERCUT
	FIRE DAMPER
	FIRE AND SMOKE DAMPER
	SMOKE DAMPER
	EXISTING FIRE DAMPER
	SUPPLY DIFFUSER
	RETURN OR TRANSFER GRILLE
	EXHAUST GRILLE
CO	CARBON MONOXIDE SENSOR
T XXX	THERMOSTAT OR TEMPERATURE SENSOR FOR DEVICE "XXX"
H XXX	HUMIDISTAT OR HUMIDITY SENSOR FOR DEVICE "XXX"
CO2	CARBON DIOXIDE SENSOR
	CONNECTION NEW TO EXISTING

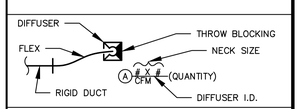

NOTE: NOT ALL SYMBOLS ON THIS LEGEND ARE NECESSARILY USED ON THIS PROJECT.

PROJECT DESCRIPTION

THIS PROJECT CONSISTS OF AN ADDITION OF A COMMUNITY CENTER TO THE LOGAN COUNTY FAIRGROUNDS IN STERLING, CO.

A NEW GRADE MOUNTED AIR HANDLING UNIT (AHU-1) AND NEW ENERGY RECOVERY VENTILATOR (ERV-1) WILL BE PROVIDED FOR THE MECHANICAL SCOPE OF THIS PROJECT.

SPECIFICATION GENERAL NOTES

GENERAL NOTES:

A. REVIEW THE CONTRACT CONDITIONS AND GENERAL REQUIREMENTS FOR INFORMATION THAT APPLIES.

B. THE WORD "PROVIDE" IS USED TO MEAN "FURNISH AND INSTALL."

C. PROVIDE ALL ITEMS FOR A COMPLETE AND SUCCESSFUL OPERATION OF ALL SYSTEMS SHOWN ON THESE DRAWINGS.

D. THE DRAWINGS ARE DIAGRAMMATIC AND INDICATE GENERAL ARRANGEMENT OF THE WORK. LOCATIONS ARE APPROXIMATE UNLESS DIMENSIONED. MINOR MODIFICATIONS IN LOCATION TO MEET SITE REQUIREMENTS ARE ACCEPTABLE. REFER TO LATEST ARCHITECTURAL DRAWINGS FOR EXACT WALL LOCATIONS AND DIMENSIONS.

E. THE ARCHITECTURAL AND ENGINEERING DRAWINGS ARE COMPLEMENTARY. GENERAL CONTRACTORS, SUBCONTRACTORS, AND VENDORS SHALL ACKNOWLEDGE ALL THE ARCHITECTURAL AS WELL AS ALL THE ENGINEERING DRAWINGS AND INCLUDE ALL WORK NECESSARY TO ACHIEVE A COMPLETE WORKING INSTALLATION FOR ALL DEVICES OR EQUIPMENT WHICH MAY BE SHOWN ON ONE DRAWING BUT NOT SHOWN ON ANOTHER. WHERE ELEMENTS ARE INDICATED OR DESCRIBED IN ANY DRAWING, IT IS THE INTENT THAT ALL RELATED CONSTRUCTION ASSOCIATED WITH SUCH ELEMENTS IS TO BE INCLUDED IN ORDER TO OBTAIN A COMPLETE INSTALLATION. FOR INSTANCE, IF A PIECE OF EQUIPMENT IS IDENTIFIED IN THE ARCHITECTURAL AND/OR MECHANICAL DRAWINGS, BUT THE ELECTRICAL CIRCUIT FOR SUCH EQUIPMENT IS NOT IDENTIFIED IN THE ELECTRICAL DRAWINGS, THE CONTRACTOR IS TO PROVIDE SUCH CIRCUIT IN ORDER TO HAVE FULLY OPERATIONAL EQUIPMENT. FOR ANOTHER EXAMPLE, IF A SINK IS INDICATED, IT IS THE INTENT THAT RELATED PLUMBING WORK INCLUDING DRAINS, VENT, PIPING, VALVES, ETC. ARE TO BE INCLUDED IN ORDER TO RESULT IN A FULLY OPERATIONAL SYSTEM. NO SUBCONTRACTOR SHALL BE ALLOWED TO EXCLUDE PORTIONS OF THE COMPLIMENTARY DRAWING SET.

F. LAY OUT ALL WORK IN ADVANCE. DO NOT DEFACE THE WORK OF OTHER TRADES OR THE EXISTING BUILDING.

G. LOCATION OF PIPES, DUCTS, SWITCHES, PANELS, EQUIPMENT, AND FIXTURES SHALL BE ADJUSTED TO ACCOMMODATE THE WORK OR INTERFERENCES ANTICIPATED AND ENCOUNTERED. DETERMINE THE EXACT ROUTE AND LOCATION OF EACH PIPE AND DUCT PRIOR TO FABRICATION.

G.A. RIGHT-OF-WAY: LINES WHICH PITCH SHALL HAVE THE RIGHT-OF-WAY OVER THOSE WHICH DO NOT PITCH. LINES WHOSE ELEVATIONS CANNOT BE CHANGED SHALL HAVE THE RIGHT-OF-WAY OVER LINES WHOSE ELEVATIONS CAN BE CHANGED.

G.B. OFFSETS, TRANSITIONS, AND CHANGES IN DIRECTION: OFFSETS, TRANSITIONS, AND CHANGES IN DIRECTION OF PIPES AND DUCTS SHALL BE MADE AS REQUIRED TO MAINTAIN PROPER HEADROOM AND PITCH OF SLOPING LINES WHETHER OR NOT INDICATED ON THE DRAWINGS.

G.C. FURNISH AND INSTALL ALL TRAPS, AIR VENTS, SANITARY VENTS, AND DEVICES AS REQUIRED TO EFFECT THESE OFFSETS, TRANSITIONS, AND CHANGES IN DIRECTION.

H. ALL PENETRATIONS OF FIRE RATED WALLS, FLOORS, AND CEILINGS SHALL HAVE THE SPACE AROUND PENETRATIONS SEALED WITH A FIRE BARRIER SEALANT MEETING THE REQUIREMENTS OF U.L. STANDARD 1479 AND ASTM-E 814. INSTALL SEALANT IN FULL COMPLIANCE WITH MANUFACTURER'S STANDARD INSTALLATION INSTRUCTIONS.

I. ALL MATERIALS LOCATED ABOVE CEILING SHALL BE SUITABLE FOR USE WITHIN A RETURN AIR PLENUM AS REQUIRED BY THE ADOPTED EDITION OF THE INTERNATIONAL MECHANICAL CODE.

J. WHEN USING A TORCH OR OTHER FLAME-PRODUCING DEVICE ON THIS PROJECT, CONTRACTOR SHALL PROVIDE ONE APPROVED FIRE EXTINGUISHER OR WATER HOSE EQUIPPED WITH A SUITABLE NOZZLE, SUFFICIENT IN LENGTH TO REACH ALL PORTIONS OF THE BUILDING AND CONNECTED TO A WATER SUPPLY ON THE PREMISES WHERE SAID BURNING OPERATION IS PERFORMED. COMBUSTIBLE MATERIAL IN THE CLOSE PROXIMITY OF OPEN FLAME SHALL BE PROTECTED AGAINST IGNITION BY SHIELDING, WETTING, OR OTHER MEANS. IN ALL CASED, A FIRE WATCH SHALL BE MAINTAINED IN THE VICINITY OF THE OPERATION BY THE CONTRACTOR FOR ONE-HALF HOUR AFTER THE TORCH OR FLAME-PRODUCING DEVICE HAS BEEN USED.

K. THE CONTRACTOR SHALL VISIT THE SITE PRIOR TO BIDDING THE PROJECT AND TAKE INTO CONSIDERATION CONDITIONS THAT MAY AFFECT THE WORK. NO ADDITIONAL COMPENSATION WILL BE APPROVED FOR FAILURE TO VISIT THE SITE PRIOR TO PRICING THE WORK.

L. MAINTAIN A CONTRACT SET OF THESE DRAWINGS AT THE SITE, WITH ALL CHANGES OR DEVIATIONS FROM THE ORIGINAL DRAWINGS NEATLY MARKED ON THEM IN RED COLOR. THIS SHALL BE A SEPARATE SET OF DRAWINGS NOT USED FOR CONSTRUCTION PURPOSES, WHICH SHALL BE KEPT UP TO DATE AS THE JOB PROGRESSES AND SHALL BE MADE AVAILABLE FOR INSPECTION BY THE ENGINEER AT ALL TIMES. UPON COMPLETION OF THE CONTRACT, THIS SET OF "AS-BUILTS" SHALL BE DELIVERED TO THE OWNER WITHIN 15 DAYS OF COMPLETION OF THE PROJECT.

M. MATERIAL SHALL BE AS SPECIFIED. SUBSTITUTIONS WILL BE CONSIDERED IF SUBMITTED FOR PRIOR APPROVAL AT LEAST ONE (1) WEEK PRIOR TO THE CONTRACT BID DATE. SUBSTITUTIONS SHOULD BE SUBMITTED SEPARATELY FOR EACH PRODUCT WITH SUPPORTING DATA, DRAWINGS AND SAMPLES AS APPROPRIATE, INCLUDING: 1.) COMPARISON OF THE QUALITIES OF THE PROPOSED SUBSTITUTION WITH THAT SPECIFIED. 2.) CHANGES REQUIRED IN OTHER ELEMENTS OF THE WORK BECAUSE OF THE SUBSTITUTION. 3.) COST DATA COMPARING THE PROPOSED SUBSTITUTION WITH THE PRODUCT SPECIFIED. THE ENGINEER WILL DETERMINE THE ACCEPTABILITY OF THE PROPOSED SUBSTITUTION.

N. SUBMIT ELECTRONIC PDF OF MANUFACTURER'S SHOP DRAWINGS FOR EQUIPMENT AND DEVICES. PRIOR TO SUBMITTING THE SHOP DRAWINGS FOR REVIEW, THE CONTRACTOR SHALL REVIEW AND CERTIFY SAME AS TO COMPLIANCE WITH THE PLANS AND SPECIFICATIONS AND FOR DIMENSIONAL SUITABILITY FOR THE APPLICATIONS.

O. WHEN ALTERNATE OR SUBSTITUTED EQUIPMENT IS USED, CONTRACTOR IS RESPONSIBLE FOR COORDINATING SPACE REQUIREMENTS, CONFIGURATIONS, CHANGES IN SUPPORTS OR STRUCTURAL MEMBERS, ELECTRICAL REQUIREMENTS, AND COORDINATION OF OTHER TRADES THAT MAY BE AFFECTED BY THEIR USE. CONTRACTOR IS RESPONSIBLE FOR VERIFYING THE SAME WHEN USING LISTED APPROVED MANUFACTURERS OTHER THAN THE BASIS OF DESIGN.

P. THE CONTRACTOR SHALL PROVIDE ALL EQUIPMENT AND PERSONNEL REQUIRED FOR TESTING OF INSTALLED EQUIPMENT.

Q. THE CONTRACTOR SHALL DEMONSTRATE THE PROPER OPERATION AND CALIBRATION OF ALL SYSTEMS TO THE OWNER, AT A TIME AS AGREED TO BY THE OWNER AND DIRECTED BY THE OWNER.

R. THE CONTRACTOR SHALL PROVIDE THE OWNER WITH OPERATION AND MAINTENANCE MANUALS FOR ALL SYSTEMS WITHIN 15 DAYS OF THE COMPLETION OF THE PROJECT.

S. THE CONTRACTOR SHALL INCLUDE THE COST FOR COMMISSIONING BY BOWMAN CONSULTING GROUP LTD TO VERIFY THE PERFORMANCE OF THE SYSTEM CONTROLS SHOWN ON THIS DRAWING. THIS INCLUDES PREPARING A COMMISSIONING PLAN, VERIFYING THE OPERATION OF ALL SYSTEMS PER CODE REQUIREMENTS, AND PROVIDING A FINAL COMMISSIONING REPORT. FINAL COMMISSIONING REPORT IS DUE UPON COMPLETION OF THE PROJECT.

CODES, REGULATIONS, AND STANDARDS:

1. ALL WORK SHALL BE IN STRICT ACCORD WITH LOCAL GOVERNING LAWS, ORDINANCES, AND REGULATIONS; ALL WORK MUST BE IN FULL ACCORDANCE WITH ALL CODES, ORDINANCES, AND CODE RULINGS. CONTRACTOR SHALL PROVIDE, WITHOUT EXTRA CHARGE, THE LABOR AND MATERIALS REQUIRED FOR FULL CODE COMPLIANCE.
2. ALL MATERIALS SHALL BE NEW AND SHALL COMPLY WITH THE SPECIFICATIONS ON DRAWINGS.
3. CONTRACTOR SHALL OBTAIN AND PAY FOR ALL LOCAL FEES, PERMITS, AND SERVICES OF INSPECTION AUTHORITIES REQUIRED BY THE WORK OF THE PROJECT. THE CONTRACTOR SHALL ARRANGE FOR ALL INSPECTIONS WHEN THEY BECOME DUE AND SHALL NOT COVER NEW WORK UNTIL APPROVED BY THE INSPECTION AUTHORITY.

GUARANTEE:

A. THE CONTRACTOR SHALL GUARANTEE ALL WORKMANSHIP, MATERIALS, AND EQUIPMENT PROVIDED FOR THE PROJECT AGAINST DEFECTS AND/OR FAULTY WORKMANSHIP FOR A PERIOD OF ONE YEAR FROM THE DATE OF FINAL ACCEPTANCE BY THE OWNER.

B. THE CONTRACTOR SHALL REPAIR AND/OR REPLACE DEFECTIVE OR FAULTY WORKMANSHIP, MATERIALS, OR EQUIPMENT, AND SHALL BE RESPONSIBLE FOR THE REPAIR AND/OR REPLACEMENT OF OTHER PROPERTY OR WORK DAMAGED AS A RESULT, WITHOUT CHARGE TO THE OWNER AND AS QUICKLY AS POSSIBLE, DURING THE GUARANTEE PERIOD.

MECHANICAL DRAWING INDEX

DRAWING NUMBER	DRAWING TITLE	ISSUE DATE – DESCRIPTION: 10-14-2022 – DD SET	12-16-2022 – BID/PERMIT
M01	MECHANICAL LEGEND AND NOTES	●	●
M02	MECHANICAL CONTROLS AND NOTES	●	●
M03	MECHANICAL SCHEDULES	●	●
M04	MECHANICAL DETAILS	●	●
M10	FIRST FLOOR PLAN – MECHANICAL	●	●

KEY:
● FULL SHEET ISSUE.
Ⓟ PARTIAL SHEET ISSUE (SKETCH).

THE DRAWINGS AND SPECIFICATIONS FOR THIS PROJECT ARE COPYRIGHT 2022, BOWMAN CONSULTING GROUP LTD., WHICH SHALL RETAIN ALL RIGHTS OF OWNERSHIP AND COPYRIGHT FOR THE INFORMATION AND DATA DESCRIBED HEREIN, WHETHER IN HARDCOPY OR ELECTRONIC FORMAT. THESE DOCUMENTS MAY NOT BE BID, REPRODUCED, OR COPIED FOR USE ON ANY OTHER PROJECT WITHOUT WRITTEN PERMISSION FROM BOWMAN CONSULTING GROUP LTD.

BUILDING CODE DATA

DISCIPLINE	CODE	EDITION
GENERAL	INTERNATIONAL BUILDING CODE	2006
HVAC / MECHANICAL	INTERNATIONAL MECHANICAL CODE	2006
PLUMBING	INTERNATIONAL PLUMBING CODE	2006
ELECTRICAL	NATIONAL ELECTRIC CODE	---
FIRE PROTECTION	INTERNATIONAL FIRE CODE	2006
	NFPA STANDARDS	---
FUEL	INTERNATIONAL FUEL GAS CODE	2006
ENERGY	INTERNATIONAL ENERGY CONSERVATION CODE	2006
ACCESSIBILITY	ICC/ANSI A117.1	---
LOCAL AMENDMENTS	---	---

NOTES:
A. ALL WORK PERFORMED SHALL COMPLY WITH THE REQUIREMENTS OF THE LISTED CODES, LOCAL CODE AMENDMENTS, AND REFERENCED STANDARDS AS ENFORCED BY THE AUTHORITY HAVING JURISDICTION (AHJ).
B. ALL WORK SUBJECT TO INSPECTION BY THE AHJ AT THE PROJECT SITE FOR COMPLIANCE.

SPECIFICATION GENERAL NOTES CONTINUED

DEMOLITION NOTES:

1. VERIFY LOCATION OF EXISTING SYSTEMS AND EXISTING FIELD CONDITIONS.
2. REVIEW ALL SHEETS FOR OTHER DEMO AND REMOVAL REQUIREMENTS.
3. COORDINATE ALL DEMOLITION WORK WITH THE ARCHITECTURAL DRAWINGS.
4. ALL CONFLICTS, OMISSIONS, AND CONCERNS SHALL BE BROUGHT TO THE ATTENTION OF THE ENGINEER IN WRITING FOR A WRITTEN RESOLUTION, BEFORE PROCEEDING WITH WORK SO INVOLVED.
5. UNLESS SPECIFICALLY NOTED TO THE CONTRARY, REMOVED MATERIALS SHALL NOT BE REUSED IN THE WORK. SALVAGED MATERIALS THAT ARE TO BE REUSED SHALL BE STORED SAFE AGAINST DAMAGE AND TURNED OVER TO THE APPROPRIATE TRADE FOR REUSE.
6. WHERE INDICATED, SALVAGED MATERIALS SHALL REMAIN THE PROPERTY OF THE OWNER. THESE MATERIALS ARE TO BE REMOVED BY THE SUBCONTRACTOR AND TURNED OVER TO THE OWNER WITHOUT DAMAGE. ALL OTHER SALVAGED MATERIALS SHALL BECOME THE PROPERTY OF THE SUBCONTRACTOR, WHO SHALL REMOVE AND LEGALLY DISPOSE OF OR (PREFERABLY) RECYCLE THEM AWAY FROM THE PREMISES.
7. WORK THAT HAS BEEN CUT OR PARTIALLY REMOVED SHALL BE PROTECTED AGAINST DAMAGE UNTIL COVERED BY PERMANENT CONSTRUCTION.
8. INSPECT, CLEAN, AND RECONDITION ALL EQUIPMENT AND ACCESSORIES THAT ARE TO BE REUSED. REMOVE ALL MUD, DEBRIS, RUST AND OTHER EXTRANEOUS MATERIALS SO THAT THE EXISTING EQUIPMENT AND ALL ACCESSORIES CAN BE REPAINTED AND REPAIRED AS REQUIRED TO PLACE IN FIRST CLASS WORKING CONDITION.
9. WHERE EXISTING EQUIPMENT IS REMOVED, PIPING OR CONDUIT SHALL BE CAPPED UNDER THE FLOOR OR BEHIND THE WALL FACE, UNLESS OTHERWISE NOTED.
10. REPAIR ALL WALL, FLOOR, AND CEILING PENETRATIONS TO MAINTAIN THE EXISTING FIRE RATING AND FINISHES.

CAIRN DESIGN LLC
leading high performance building solutions
1805 Sheely Drive
Fort Collins, CO 80526
voice: (970)-286-7968
cairndesignllc.com

COLORADO REGISTERED PROFESSIONAL ENGINEER
PETER C. DALTON
No. 33293

Bowman
323 3RD AVENUE, #100
LONGMONT, CO 80501
TEL: 1.303.678.1108
BOWMAN.COM

NOTICE: DUTY OF COOPERATION Release of these plans contemplates further coordination among the owner, his consultant(s), the architect and engineers. Design and construction are complex. Although the architect and his consultants have performed their services with due care and diligence, they cannot guarantee perfection. Communication is imperfect, and every contingency cannot be anticipated. Any ambiguity or discrepancy discovered by the use of these plans shall be reported immediately to the architect. Failure to notify the architect compounds misunderstanding and increases the possibility of conflicts and deficiencies. Such failure shall be the owner's and contractor's sole responsibility for all consequences. Changes made from the plans without consent of the architect are unauthorized, and shall relieve the architect/engineer of responsibility for all consequences caused by such changes.

BOWMAN PROJECT NO: 230325

PROJECT:
LOGAN COUNTY COMMUNITY CENTER ADDITION

SHEET TITLE:
MECHANICAL LEGEND AND NOTES

ISSUE DATE:
12/16/22

REVISIONS:
10/14/22 DD SET
12/16/22 BID/PERMIT

PROJECT NO.:
2208

SHEET NO.
M01

As instruments of service, these drawings and the design represented are the permanent property of Cairn Design, LLC. Reproduction or use of these drawings other than for the project intended, without written consent from the Designer, is prohibited. Unauthorized use will be subject to legal action.

TEMPERATURE CONTROLS

1. THE HVAC SYSTEM CONTROLS ARE TO BE FULLY AUTOMATIC UNLESS OTHERWISE LISTED BELOW.
   - 1.1. CONTROLS SHALL HAVE INTEGRAL FAULT DETECTION AND DIAGNOSTIC CAPABILITIES.
2. ALL CONTROL SYSTEMS SHALL BE DESIGNED AND PROVIDED BY A CONTROL MANUFACTURER WHO HAS BEEN IN THE BUSINESS OF MANUFACTURING, DESIGNING, AND INSTALLING CONTROL COMPONENTS FOR A MINIMUM OF TEN (10) YEARS.
3. COORDINATE WITH ELECTRICAL CONTRACTOR FOR INTERFACE WITH LINE VOLTAGE WIRING, CONNECTIONS, RELAYS, ETC.
4. SETPOINTS:
   - 4.1. OCCUPIED:
     - 4.1.1. HEATING: 70 DEGREES FAHRENHEIT (ADJUSTABLE).
     - 4.1.2. COOLING: 75 DEGREES FAHRENHEIT (ADJUSTABLE).
   - 4.2. UNOCCUPIED:
     - 4.2.1. HEATING: 55 DEGREES FAHRENHEIT (ADJUSTABLE).
     - 4.2.2. COOLING: 85 DEGREES FAHRENHEIT (ADJUSTABLE).
5. THERMOSTATS OR TEMPERATURE SENSORS:
   - 5.1. ALL SETPOINTS ARE TO BE ADJUSTABLE.
   - 5.2. TEMPERATURE CONTROL SETUP AND SETBACK SHALL BE ACCOMPLISHED BY MEANS OF A DEDICATED PROGRAMMABLE THERMOSTAT WITH ADJUSTABLE HEATING AND COOLING SETPOINTS.
   - 5.3. CONTRACTOR SHALL PROGRAM THERMOSTATS FOR OCCUPIED/UNOCCUPIED PERIODS BASED ON A SCHEDULE PROVIDED BY OWNER.
   - 5.4. CONTROLS SHALL HAVE A 5 DEGREE F. DEAD-BAND FOR AUTO-CHANGEOVER SYSTEMS, WITH OVERLAP RESTRICTIONS.
   - 5.5. SYSTEM SHALL HAVE A MINIMUM OF A 7-DAY PROGRAM.
   - 5.6. PROVIDE A 2-HOUR MINIMUM OCCUPIED OVERRIDE.
   - 5.7. PROVIDE MINIMUM A 10-HOUR BATTERY BACKUP.
   - 5.8. INSTALL ALL THERMOSTATS AND TEMPERATURE SENSORS BOTTOM AT 46" AFF.
6. CONTROLS FOR THE NEW CENTRAL AIR HANDLING SYSTEM ARE TO BE ELECTRIC/ ELECTRONIC.
7. RTUS:
   - 7.1. RTU SHALL BE SINGLE ZONE VAV WITH INTEGRAL MANUFACTURER CONTROLS. AIR HANDLING UNIT SHALL MODULATE FAN SPEED AND COMPRESSOR/HEATER IN ORDER TO MAINTAIN SPACE TEMPERATURE. UNIT SHALL RAMP UP OUTSIDE AIR BASED ON SPACE CARBON DIOXIDE DETECTION.
   - 7.2. RTU-1 (DEMAND CONTROLLED VENTILATION):
     - 7.2.1. OA DAMPER TO BE CONTROLLED BY CO2 SENSOR.
     - 7.2.2. OA DAMPER SHALL ENGAGE WHEN CO2 SENSOR DETECTS LEVELS ABOVE 1000 PPM (ADJ.)
     - 7.2.3. OA DAMPER SHALL DISENGAGE WHEN CO2 SENSOR DETECTS LEVELS BELOW 900 PPM (ADJ.)
     - 7.2.4. OA DAMPER SHALL RUN FOR MINIMUM OF 15 MINUTES (ADJ.)

HVAC GENERAL NOTES

1. THE NEW MECHANICAL SYSTEMS SHALL BE BY THE MECHANICAL CONTRACTOR. THIS INCLUDES, BUT IS NOT LIMITED TO:
   - 1.1. THE AIR DISTRIBUTION SYSTEMS WITH: AIR HANDLING EQUIPMENT, DUCTWORK, FLEXIBLE DUCT, DIFFUSERS, GRILLES, DAMPERS, CONTROL SYSTEMS, ETC.
   - 1.2. THE HYDRONIC HEATING AND COOLING SYSTEMS WITH: BOILERS, CHILLERS, COOLING TOWERS, PUMPS, COILS, PIPING, CONTROL SYSTEMS, ETC.
2. CONTRACTOR SHALL SECURE THE SERVICES OF AN INDEPENDENT TEST, ADJUST, AND BALANCE CONTRACTOR WHO IS A MEMBER OF THE NEBB OR EQUIVALENT. FOLLOWING ALL TAB WORK, SUBMIT TEST RESULTS IN A BOUND MANUAL, STAMPED AND SIGNED BY A CERTIFIED BALANCING SUPERVISOR OR REGISTERED PE ON STAFF WITH TAB CONTRACTOR. REQUIRED FINAL AIR AND HYDRONIC BALANCE TOLERANCE SHALL BE +10% TO -5% OF QUANTITIES SHOWN ON THESE PLANS.
3. PROJECT DESIGN CONDITIONS ARE:
   - 3.1. LOCATION: LOGAN COUNTY
   - 3.2. SITE ELEVATION: 3932 FEET.
   - 3.3. HVAC DESIGN CONDITIONS PER PER CHVAC LOAD PROGRAM WHICH MEETS OR EXCEEDS ASHRAE 99.6% HEATING, 0.4% COOLING ARE:
     - 3.3.1. LOCATION USED FOR CONDITIONS: COLORADO PLAINS REGIONAL, CO
     - 3.3.2. HEATING OUTDOOR DB: -1.8 DEGREES FAHRENHEIT.
     - 3.5.3. COOLING OUTDOOR DB/MCWB: 95.6/62.9 DEGREES FAHRENHEIT.
     - 3.5.4. INDOOR DESIGN TEMPERATURES AS STATED IN THE TEMPERATURE CONTROLS INFORMATION.
4. IDENTIFY ALL HVAC AND REFRIGERATION EQUIPMENT AS TO THE AREA SERVED BY THE EQUIPMENT. IDENTIFICATION SHALL BE ENGRAVED PLASTIC TAGS PERMANENTLY AFFIXED TO EACH PIECE OF EQUIPMENT.
5. PROVIDE UL RATED FIRE OR FIRE/SMOKE DAMPERS WHERE INDICATED ON PLANS OR SCHEDULES. INSTALL PER BUILDING DEPARTMENT, UL, AND SMACNA REQUIREMENTS. INCLUDE LABELED ACCESS FOR DUCT AND CEILING/WALL STRUCTURES. ACCESS DOORS TO BE UL RATED IN ALL FIRE RATED ARCHITECTURAL ASSEMBLIES.
7. PROVIDE ALL CURBS, SUPPORTS, AND ANCHORS FOR MECHANICAL WORK. NO CHAIN, TAPE OR WIRE MAY BE USED FOR HANGING OR SUPPORTING.
8. RECEIVE, UNCRATE, ASSEMBLE, AND INSTALL ALL EQUIPMENT FURNISHED BY THIS CONTRACT AND FURNISHED BY THE OWNER IN CONFORMANCE TO MANUFACTURER'S RECOMMENDATIONS.
9. DUCT DIMENSIONS ARE CLEAR INSIDE DIMENSIONS. WHERE DUCT LINER IS USED, OVERALL OUTSIDE DUCT DIMENSIONS SHALL BE ADJUSTED TO ALLOW FOR LINER THICKNESS.
10. ALL SHEET METAL TO BE MADE AND INSTALLED TO SMACNA STANDARDS (AND IN ACCORDANCE WITH THE INTERNATIONAL MECHANICAL CODE) WITH 45 DEGREE MAXIMUM REDUCING, 30 DEGREE MAXIMUM EXPANDING TRANSITIONS. ALL EXPOSED RECTANGULAR TO BE PAINT LOCK GALVANIZED. SINGLE BLADE TURNING VANES AND 1.5 CENTERLINE RADIUS FOR ALL ELBOWS AND TEES.
11. ALL SUPPLY AND RETURN RECTANGULAR DUCTS TO HAVE 1" THICK 2 LB/CF DENSITY ACOUSTIC DUCT LINER MINIMUM R-5 CLASS I, UL-181.
12. ALL OUTSIDE AIR DUCTS TO HAVE R-8 1-1/2" THICK AND 1-1/2 LB/CF DENSITY UL 181 CLASS ONE FIBERGLASS DUCT WRAP.
13. DUCT LINER SHALL BE ATTACHED WITH STIC-CLIPS 15"OC EACH WAY AND 100% COVERAGE OF FLAME PROOF ADHESIVE. INCREASE DUCT TO ALLOW FOR LINER. SEAL ALL DUCT AIRTIGHT WITH TWO COATS OF DUCT SEALANT. DUCT SEALANT TO BE CLEAR PAINTABLE SILICON CAULK ON ALL EXPOSED DUCTWORK.
14. CAULK ALL DUCT LONGITUDINAL AND TRANSVERSE JOINTS AND SEAMS AIR AND WATER TIGHT WITH PERMANENT COMMERCIAL CAULK PER MANUFACTURER'S RECOMMENDATIONS.
15. CONCEALED ROUND SUPPLY DUCTS SHALL BE LOW-PRESSURE CONSTRUCTION, SEALED AIRTIGHT AND EXTERNALLY INSULATED WITH 1-1/2", 3/4 LB/CF DENSITY BLANKET INSULATION WITH FOIL SCRIM KRAFT FACING. FOIL TAPE ALL JOINTS, MINIMUM R5 FIBERGLASS.
16. EXPOSED ROUND DUCTS SHALL BE PAINT LOCK SPIRAL ONE GAGE HEAVIER THAN SMACNA STANDARD. HARD PIPE TO DIFFUSERS (NO FLEX) AND SEAL WITH CLEAR, PAINTABLE, SILICONE CAULK.
17. ALL FLEXIBLE DUCTWORK SHOWN SHALL BE INSULATED, CLASS I, UL 181, SEMI-RIGID FLEXIBLE DUCT. R4.2 FLEXMASTER 5M OR THERMOPILEX XMK, AND SHALL CONFORM TO LOCAL CODES. NO FLEX DUCT IN EXPOSED AREAS.
18. ALL FLEXIBLE DUCT TAKEOFFS SHALL BE CONICAL BELL MOUTH SPIN-IN FITTINGS WITH MANUAL VOLUME DAMPER WHERE POSSIBLE. MAKE CONNECTION WITH DRAW BANDS AT EACH END OF FLEX.
19. ALL FLEXIBLE DUCT TO BE SAME SIZE AS DIFFUSER CONNECTION.
20. LIMIT FLEXIBLE DUCTWORK TO 5-FT MAXIMUM LENGTH.
21. THIS CONTRACTOR SHALL COORDINATE ALL DUCTWORK PRIOR TO INSTALLATION.
22. PROVIDE SMOKE DETECTORS IN RETURN DUCT FOR MECHANICAL SYSTEMS OVER 2000 CFM (INDIVIDUALLY OR COLLECTIVELY IN A SHARED RETURN AIR PLENUM) AS REQUIRED BY SECTION 606 OF THE INTERNATIONAL MECHANICAL CODE.
23. PROVIDE SLEEVES AND COLLARS FOR ALL DUCTWORK AND PIPES THROUGH WALL, FLOORS, AND CEILINGS. SEAL ALL EXTERNAL PENETRATIONS OF FIRE RATED WALL, FLOORS, AND CEILINGS WITH APPROVED FIRE STOP MATERIAL IN COMPLIANCE WITH ASTM E 814 AND UL 1479..
24. CONFIRM VOLTAGE, PHASE, AND AMPACITY WITH ELECTRICAL CONTRACTOR PRIOR TO ORDERING EQUIPMENT. ALL CONTROL AND INTERLOCK WIRING FOR MECHANICAL EQUIPMENT BY MECHANICAL CONTRACTOR. THREE-PHASE MOTORS TO HAVE MAGNETIC STARTERS WITH PROTECTION ON ALL THREE LEADS. CONTROL AND HEATING/COOLING EQUIPMENT TO AUTOMATICALLY RESTART AFTER POWER FAILURE. ALL WIRING SHALL BE WITHIN CONDUIT AS REQUIRED BY CODE.
25. ALL DUCT AND PIPE INSULATION EXPOSED OUTSIDE SHALL BE WEATHER PROTECTED AND UV RESISTANT WITH ALUMINUM JACKET.
26. SEE TEMPERATURE CONTROLS THIS SHEET FOR TEMPERATURE CONTROLS REQUIREMENTS.
27. ALL RECIRCULATED AIR SHALL PASS THROUGH STANDARD 2" THICK PLEATED MERV 8 THROW AWAY FILTERS. PROVIDE ONE ADDITIONAL SET FOR OWNER AT PROJECT COMPLETION.
28. INSTALL ALL NEW MECHANICAL EQUIPMENT IN COMPLETE COMPLIANCE WITH MANUFACTURER'S STANDARD INSTALLATION INSTRUCTIONS. ARRANGE ALL EQUIPMENT TO PERMIT EASY REMOVAL OF COILS, MOTORS, FILTERS, AND ALL OTHER PARTS WHICH MIGHT REQUIRE PERIODIC REPLACEMENT OR MAINTENANCE.

CAIRN DESIGN LLC
leading high performance building solutions

1805 Sheely Drive
Fort Collins, CO 80526

voice: (970)-286-7968

cairndesignllc.com

COLORADO REGISTERED
PETER C. DAVIDSON
33293
PROFESSIONAL ENGINEER

Bowman

323 3RD AVENUE, #100
LONGMONT, CO 80501
TEL: 1.303.678.1108

BOWMAN.COM

NOTICE: DUTY OF COOPERATION Release of these plans contemplates further coordination among the owner, his consultant(s), the architect and engineers. Design and construction are complex. Although the architect and his consultants have performed their services with due care and diligence, they cannot guarantee perfection. Communication is imperfect, and every contingency cannot be anticipated. Any ambiguity or discrepancy discovered by the use of these plans shall be reported immediately to the architect. Failure to notify the architect compounds misunderstanding and increases the cost of correcting the problem. Changes made from the plans without consent of the architect are unauthorized, and shall relieve the architect/engineer of responsibility for all consequences caused by such changes.

BOWMAN PROJECT NO: 230325

PROJECT:

LOGAN COUNTY
COMMUNITY CENTER
ADDITION

SHEET TITLE:

MECHANICAL
CONTROLS
AND NOTES

ISSUE DATE:

12/16/22

REVISIONS:

10/14/22 DD SET
12/16/22 BID/PERMIT

PROJECT NO.:
2208

SHEET NO.

M02

As instruments of service, these drawings and the design represented are the permanent property of Cairn Design, LLC. Reproduction or use of these drawings other than for the project intended, without written consent from the Designer, is prohibited. Unauthorized use will be subject to legal action.

PACKAGE ROOFOP UNIT – HORIZONTAL DISCHARGE

TAG	MANUFACTURER AND MODEL	OPER. ELEV.	SUPPLY FAN HP	SUPPLY FAN ESP	EXHAUST FAN HP	EXHAUST FAN ESP	MAXIMUM SUPPLY CFM	HEATING SUPPLY CFM	MAX. OA CFM	COOLING COIL CONDITIONS										GAS HEATING CONDITIONS						FILTERS – EFF.	MIN CIRCUIT AMPS	MOP AMPS	ELECTRICAL	NET WEIGHT LBS	NOTES
										TOTAL (MBH)	SENSIBLE (MBH)	OUTSIDE AIR		RETURN AIR		MIXED AIR		LEAVING AIR		INPUT (MBH)	OUTPUT (MBH)	OUTSIDE AIR DB °F	RETURN AIR DB °F	MIXED AIR DB °F	LEAVING AIR DB °F	FINAL					
												DB °F	WB °F	DB °F	WB °F	DB °F	WB °F	DB °F	WB °F												
RTU–1	TRANE VOYAGER	3932	20	1.5	1.5	0.5	15000	8700	4300	486.8	478.0	95.6	62.9	78.0	67.2	84.5	62.6	55.2	52.5	800	518.4	–1.8	68.0	23.5	87.0	MERV 8	255.1	300.0	208V/3PH	6356.0	1–7

NOTES:
1. ALL UNIT OUTPUTS ARE AT JOBSITE ALTITUDE.
2. UNITS WIRED WITH A SINGLE POINT ELECTRICAL CONNECTION.
3. PROVIDE WITH DEMAND CONTROL VENTILATION.
4. PROVIDE WITH 100% OA ECONOMIZER.
5. PROVIDE WITH POWERED EXHAUST.
6. SINGLE ZONE VAV CONTROLS.
7. RETURN AIR SMOKE DETECTOR, INSTALLED PER IMC 606 REQUIREMENTS.

ENERGY RECOVERY VENTILATOR SCHEDULE

TAG	MANUFACTURER	MODEL	SERVES	OA FAN			EA FAN			FAN DRIVE TYPE	UNIT ELECTRICAL MCA/VOLTS/PHASE	COOLING (DEG. F)		HEATING (DEG. F)		DIMENSIONS LxWxH (IN.)	OPERATING WEIGHT (LBS.)	NOTES
				CFM	ESP (IN. WC)	HP OR W	CFM	ESP (IN. WC)	HP OR W			OA (DB)	SA (DB)	OA (DB)	SA (DB)			
ERV–1	RENEWAIRE	HE1.5JINH	MAIN LEVEL	1200	0.5	1 HP	1200	0.5	1 HP	BELT	7.7/208/1	95.6	84.9	–1.8	46.2	48X42X34	504	B–G

NOTES:
A. MANUFACTURER'S ENHANCED CONTROLS WITH LOW–VOLTAGE REMOTE WALL–MOUNTED CONTROLLER, SEE PLANS FOR LOCATION.
B. MERV 8 FILTER ON OUTSIDE AIR INLET AND MERV 8 FILTER ON EXHAUST AIR INLET.
C. DEFROST CYCLE.
D. VENTILATION RATE MEETS OR EXCEEDS VENTILATION RATE REQUIRED PER VENTILATION TABLE ON THIS SHEET.
E. EC MOTOR
F. DISCONNECT SWITCH.
G. BACKDRAFT DAMPER.

EQUALS BY: BROAN, GREENHECK.

AIR DEVICE SCHEDULE

TAG	MANUFACTURER	MODEL	MATERIAL	COLOR	FACE SIZE (INCHES)	NECK SIZE (INCHES)	OPPOSED BLADE DAMPER	SERVICE	TYPE	NOTES
S1	TITUS	300RL	STEEL	WHITE	SEE PLAN	SEE PLAN	NO	SUPPLY	GRILLE	A–D
S2	TITUS	TMS	STEEL	WHITE	12x12	SEE PLAN	NO	SUPPLY	DIFFUSER	A–D
S3	TITUS	300RL	STEEL	GALVANIZED	SEE PLAN	SEE PLAN	NO	SUPPLY	GRILLE	A–D
R1	TITUS	350RL	STEEL	WHITE	SEE PLAN	SEE PLAN	NO	RETURN	GRILLE	A–D
E1	TITUS	350RL	STEEL	WHITE	SEE PLAN	SEE PLAN	YES	EXHAUST	DIFFUSER	A–D
E2	TITUS	350RL	STEEL	WHITE	SEE PLAN	SEE PLAN	YES	EXHAUST	GRILLE	A–D
T1	TITUS	350RL	STEEL	WHITE	SEE PLAN	SEE PLAN	NO	TRANSFER	GRILLE	A–D
T2	TITUS	350RL	STEEL	WHITE	24X24	SEE PLAN	NO	TRANSFER	DIFFUSER	A–D

NOTES:
A. MAXIMUM STATIC PRESSURE DROP ALLOWED: 0.15" W.C. UNLESS OTHERWISE NOTED.
B. SEE PLANS FOR SIZES AND QUANTITIES.
C. SURFACE MOUNTING BORDER.
D. MAXIMUM N.C. LEVEL EQUALS 25.

EQUALS BY: KRUEGER, METAL–AIRE, PRICE

ELECTRIC DUCT HEATER SCHEDULE

TAG	MANUFACTURER	MODEL	SERVICE	AIR FLOW (CFM)	E.S.P. (IN. W.C.)	L.A.T. (DEGREES F.)	ELECTRICAL DATA		OPTIONS	NOTES
							WATTS OR AMPS	VOLTS/PH.		
DH–1	INDEECO	QUA	ERV	1200	0.0	70.0	10 KW	208/3	1,3	NONE

NOTES:
A. WITH CEILING/WALL MOUNTING KIT.
B. DOWN DISCHARGE SUPPLY AIR
C. WITH ANGLED DISCHARGE LOUVER.
D. PROVIDE MODULATING GAS VALVE.
E. SEALED COMBUSTION.
F. POWER VENTED, TYPE PS VENT WITH BREIDERT WIND CAP.
G. MANUFACTURER'S STANDARD CONCENTRIC VENTING KIT FOR WALL**/ROOF** APPLICATION

EQUALS BY: SEE SPECIFICATIONS **** OR **** CHROMALOX, FEDERAL PACIFIC, INDEECO, LENNOX, TRANE, OR REZNOR.

OPTIONS (SOME FIELD INSTALLED):
1. UNIT DISCONNECT SWITCH
2. CONTROL TRANSFORMER
3. DUCT THERMOSTAT
4. 7–DAY PROGRAMABLE THERMOSTAT
5. CONCENTRIC WALL OR ROOF TERMINATION KIT.

LOGAN COUNTY COMMUNITY CENTER - VENTILATION CALCULATIONS

Ventilation Calculations Comply with: ASHRAE 62.1

Room Name	Room Area	Room Type	Number of People	CFM/Person	CFM/sqft	Total Required OA CFM	Total Provided OA CFM
RTU-1 (DEMAND CONTROLLED VENTILATION)							
CORRIDOR	77	Corridors	0	0	0	0	0
STORAGE	506	Storage	0	0	0	0	0
COMMUNITY CENTER	6120	Multipurpose assembly	800	5	0	5000	4300
ERV-1 (CONTINUOUS OUTSIDE AIR)							
CORRIDOR	77	Corridors	0	0	0.06	6	10
STORAGE	506	Storage	0	0	0.12	76	80
COMMUNITY CENTER	6120	Multipurpose assembly	0	5	0.06	459	1160
MENS	330	Toilet rooms and bathrooms	560 CFM CONTINUOUS EXHAUST				
WOMENS	330	Toilet rooms and bathrooms	490 CFM CONTINOUS EXHAUST				
Total						**5541**	**5,550**

CAIRN DESIGN LLC
leading high performance building solutions
1805 Sheely Drive
Fort Collins, CO 80526
voice: (970)-286-7968
cairndesignllc.com

COLORADO REGISTERED PROFESSIONAL ENGINEER
TYLER C. DAMONA
No. 33293

Bowman
323 3RD AVENUE, #100
LONGMONT, CO 80501
TEL: 1.303.678.1108
BOWMAN.COM

NOTICE: DUTY OF COOPERATION Release of these plans contemplates further coordination among the owner, his contractor(s), the architect and engineers. Design and construction are complex. Although the architect and his consultants have performed their services with due care and diligence, they cannot guarantee perfection. Communication is imperfect, and every contingency cannot be anticipated. Any ambiguity or discrepancy discovered by the use of these plans shall be reported immediately to the architect. Failure to notify the architect compounds misunderstanding and increases the possibility of conflicts. Commencement of work by any party implies acceptance of these plans and assumes responsibility for all consequences. Changes made from the plans without consent of the architect are unauthorized, and shall relieve the architect/engineer of responsibility for all consequences caused by such changes.

BOWMAN PROJECT NO: 230325

PROJECT:

LOGAN COUNTY COMMUNITY CENTER ADDITION

SHEET TITLE:

MECHANICAL SCHEDULES

ISSUE DATE:

12/16/22

REVISIONS:

10/14/22 DD SET
12/16/22 BID/PERMIT

PROJECT NO.:

2208

SHEET NO.

M03

As instruments of service, these drawings and the design represented are the permanent property of Cairn Design, LLC. Reproduction or use of these drawings other than for the project intended, without written consent from the Designer, is prohibited. Unauthorized use will be subject to legal action.

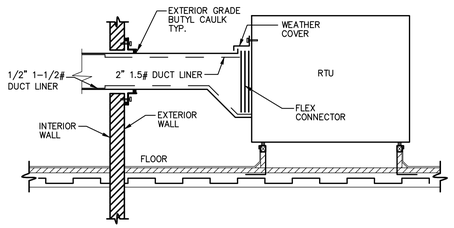

RTU SUPPLY DUCT THRU WALL DETAIL

SCALE: NO SCALE

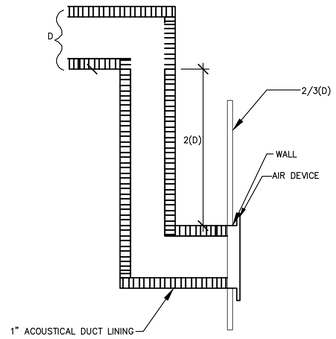

SOUND ELBOW DETAIL

SCALE: NO SCALE

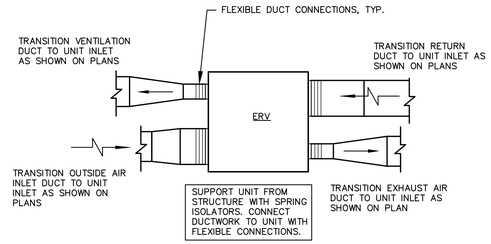

ENERGY RECOVERY VENTILATOR DUCTING DETAIL

SCALE: NO SCALE

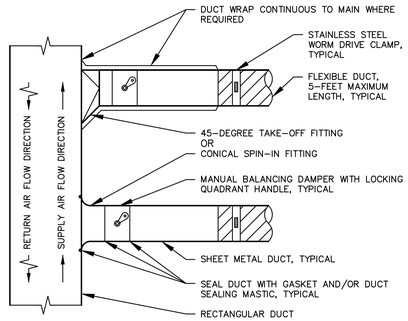

DUCT TAKE-OFF DETAIL – ROUND

SCALE: NO SCALE

Generated by COM*check-Web* Software

Mechanical Compliance Certificate

Section 1: Project Information

Energy Code: **2009 IECC**
Project Title: Logan County Copy 2
Project Type: Addition

Construction Site: Owner/Agent: Designer/Contractor:

Section 2: General Information

Building Location (for weather data): Sterling, Colorado
Climate Zone: 5b

Section 3: Mechanical Systems List

Quantity System Type & Description

1 AHU-1 (Single Zone) :
Heating: 1 each - Central Furnace, Gas, Capacity = 800 kBtu/h
Proposed Efficiency = 81.00% Ec, Required Efficiency: 80.00 % Ec
Cooling: 1 each - Single Package DX Unit, Capacity = 600 kBtu/h, Air-Cooled Condenser, Air Economizer
Proposed Efficiency = 10.00 EER, Required Efficiency = 9.80 EER
Proposed Part Load Efficiency = 15.00 IPLV, Required Part Load Efficiency = 9.50 IPLV
Fan System: FAN SYSTEM 1 -- Compliance (Motor nameplate HP and fan efficiency method) : Passes

Fans:
FAN 2 Exhaust, Single-Zone VAV, 15000 CFM, 1.5 motor nameplate hp
FAN 1 Supply, Single-Zone VAV, 15000 CFM, 20.0 motor nameplate hp

1 Water Heater:
Gas Storage Water Heater, Capacity: 50 gallons, Input Rating: 76 kBtu/h w/ Circulation Pump
Proposed Efficiency: 94.00 % Et, Required Efficiency: 80.00 % Et

Section 4: Requirements Checklist

Requirements Specific To: AHU-1 :

- ☐ 1. Equipment minimum efficiency: Central Furnace (Gas): 80.00 % Ec
- ☐ 2. Equipment minimum efficiency: Single Package Unit: 9.80 EER + 9.5 IPLV
- ☐ 3. Integrated economizer is required for this location and system.
- ☐ 4. Cooling system provides a means to relieve excess outdoor air during economizer operation.
- ☐ 5. Hot gas bypass prohibited unless system has multiple steps of unloading or continuous capacity modulation
- ☐ 6. Hot gas bypass limited to 25% of total cooling capacity

Requirements Specific To: Water Heater :

- ☐ 1. Water heating equipment meets minimum efficiency requirements: Gas Storage Water Heater efficiency: 80.00 % Et (110 SL, kBtu/h)
- ☐ 2. All piping in circulating system insulated
- ☐ 3. Hot water storage temperature controls that allow setpoint of 90°F for non-dwelling units and 110°F for dwelling units.
- ☐ 4. Automatic time control of heat tapes and recirculating systems present
- ☐ 5. Controls will shut off operation of circulating pump between water heater/boiler and storage tanks within 5 minutes after end of heating cycle

Generic Requirements: Must be met by all systems to which the requirement is applicable:

- ☐ 1. Plant equipment and system capacity no greater than needed to meet loads

Exception(s):

- ☐ Standby equipment automatically off when primary system is operating
- ☐ Multiple units controlled to sequence operation as a function of load

- ☐ 2. Minimum one temperature control device per system
- ☐ 3. Minimum one humidity control device per installed humidification/dehumidification system
- ☐ 4. Load calculations per ASHRAE/ACCA Standard 183.
- ☐ 5. Automatic Controls: Setback to 55°F (heat) and 85°F (cool); 7-day clock, 2-hour occupant override, 10-hour backup
Exception(s):
  - ☐ Continuously operating zones
- ☐ 6. Outside-air source for ventilation; system capable of reducing OSA to required minimum
- ☐ 7. R-5 supply and return air duct insulation in unconditioned spaces
R-8 supply and return air duct insulation outside the building
R-8 insulation between ducts and the building exterior when ducts are part of a building assembly
Exception(s):
  - ☐ Ducts located within equipment
  - ☐ Ducts with interior and exterior temperature difference not exceeding 15°F.
- ☐ 8. Mechanical fasteners and sealants used to connect ducts and air distribution equipment
- ☐ 9. Ducts sealed - longitudinal seams on rigid ducts; transverse seams on all ducts; UL 181A or 181B tapes and mastics
- ☐ 10. Hot water pipe insulation: 1.5 in. for pipes <=1.5 in. and 2 in. for pipes >1.5 in.
Chilled water/refrigerant/brine pipe insulation: 1.5 in. for pipes <=1.5 in. and 1.5 in. for pipes >1.5 in.
Steam pipe insulation: 1.5 in. for pipes <=1.5 in. and 3 in. for pipes >1.5 in.
Exception(s):
  - ☐ Piping within HVAC equipment.
  - ☐ Fluid temperatures between 55 and 105°F.
  - ☐ Fluid not heated or cooled with renewable energy.
  - ☐ Piping within room fan-coil (with AHRI440 rating) and unit ventilators (with AHRI840 rating).
  - ☐ Runouts <4 ft in length.
- ☐ 11. Operation and maintenance manual provided to building owner
- ☐ 12. Thermostatic controls have 5°F deadband
Exception(s):
  - ☐ Thermostats requiring manual changeover between heating and cooling
  - ☐ Special occupancy or special applications where wide temperature ranges are not acceptable and are approved by the authority having jurisdiction.
- ☐ 13. Balancing devices provided in accordance with IMC 603.17
- ☐ 14. Demand control ventilation (DCV) present for high design occupancy areas (>40 person/1000 ft2 in spaces >500 ft2) and served by systems with any one of 1) an air-side economizer, 2) automatic modulating control of the outdoor air damper, or 3) a design outdoor airflow greater than 3000 cfm.
Exception(s):
  - ☐ Systems with heat recovery.
  - ☐ Multiple-zone systems without DDC of individual zones communicating with a central control panel.
  - ☐ Systems with a design outdoor airflow less than 1200 cfm.
  - ☐ Spaces where the supply airflow rate minus any makeup or outgoing transfer air requirement is less than 1200 cfm.
- ☐ 15. Motorized, automatic shutoff dampers required on exhaust and outdoor air supply openings
Exception(s):
  - ☐ Gravity dampers acceptable in buildings <3 stories
- ☐ 16. Automatic controls for freeze protection systems present
- ☐ 17. Exhaust air heat recovery included for systems 5,000 cfm or greater with more than 70% outside air fraction or specifically exempted
Exception(s):
  - ☐ Hazardous exhaust systems, commercial kitchen and clothes dryer exhaust systems that the International Mechanical Code prohibits the use of energy recovery systems.
  - ☐ Systems serving spaces that are heated and not cooled to less than 60°F.
  - ☐ Where more than 60 percent of the outdoor heating energy is provided from site-recovered or site solar energy.
  - ☐ Heating systems in climates with less than 3600 HDD.
  - ☐ Cooling systems in climates with a 1 percent cooling design wet-bulb temperature less than 64°F.
  - ☐ Systems requiring dehumidification that employ energy recovery in series with the cooling coil.
  - ☐ Laboratory fume hood exhaust systems that have either a variable air volume system capable of reducing exhaust and makeup air volume to 50 percent or less of design values or, a separate make up air supply meeting the following makeup air requirements:

a) at least 75 percent of exhaust flow rate, b) heated to no more than 2°F below room setpoint temperature, c) cooled to no lower than 3°F above room setpoint temperature, d) no humidification added, e) no simultaneous heating and cooling.

Section 5: Compliance Statement

Compliance Statement: The proposed mechanical design represented in this document is consistent with the building plans, specifications and other calculations submitted with this permit application. The proposed mechanical systems have been designed to meet the 2009 IECC requirements in COM*check-Web* and to comply with the mandatory requirements in the Requirements Checklist.

Name - Title Signature Date

Section 6: Post Construction Compliance Statement

- ☐ HVAC record drawings of the actual installation, system capacities, calibration information, and performance data for each equipment provided to the owner.
- ☐ HVAC O&M documents for all mechanical equipment and system provided to the owner by the mechanical contractor.
- ☐ Written HVAC balancing and operations report provided to the owner.

The above post construction requirements have been completed.

Principal Mechanical Designer-Name Signature Date

CAIRN DESIGN LLC
leading high performance building solutions
1805 Sheely Drive
Fort Collins, CO 80526
voice: (970)-286-7968
cairndesignllc.com

COLORADO REGISTERED PROFESSIONAL ENGINEER
PETER C. DAVIDSON
No. 33293

Bowman
323 3RD AVENUE, #100
LONGMONT, CO 80501
TEL: 1.303.678.1108
BOWMAN.COM

NOTICE: DUTY OF COOPERATION Release of these plans contemplates further coordination among the owner, his consultant(s), the architect and engineers. Design and construction are complex. Although the architect and his consultants have performed their services with due care and diligence, they cannot guarantee perfection. Communication is imperfect, and every contingency cannot be anticipated. Any ambiguity or discrepancy discovered by the use of these plans shall be reported immediately to the architect. Failure to notify the architect compounds misunderstanding and increases the difficulty of correcting the problem. Failure to notify the architect of a discrepancy shall result in the assumption of responsibility for all consequences. Changes made from the plans without consent of the architect are unauthorized, and shall relieve the architect/engineer of responsibility for all consequences caused by such changes.

BOWMAN PROJECT NO: 230325

PROJECT:

LOGAN COUNTY COMMUNITY CENTER ADDITION

SHEET TITLE:

MECHANICAL DETAILS

ISSUE DATE:

12/16/22

REVISIONS:

10/14/22 DD SET
12/16/22 BID/PERMIT

PROJECT NO.:

2208

SHEET NO.

M04

As instruments of service, these drawings and the design represented are the permanent property of Cairn Design, LLC. Reproduction or use of these drawings other than for the project intended, without written consent from the Designer, is prohibited. Unauthorized use will be subject to legal action.

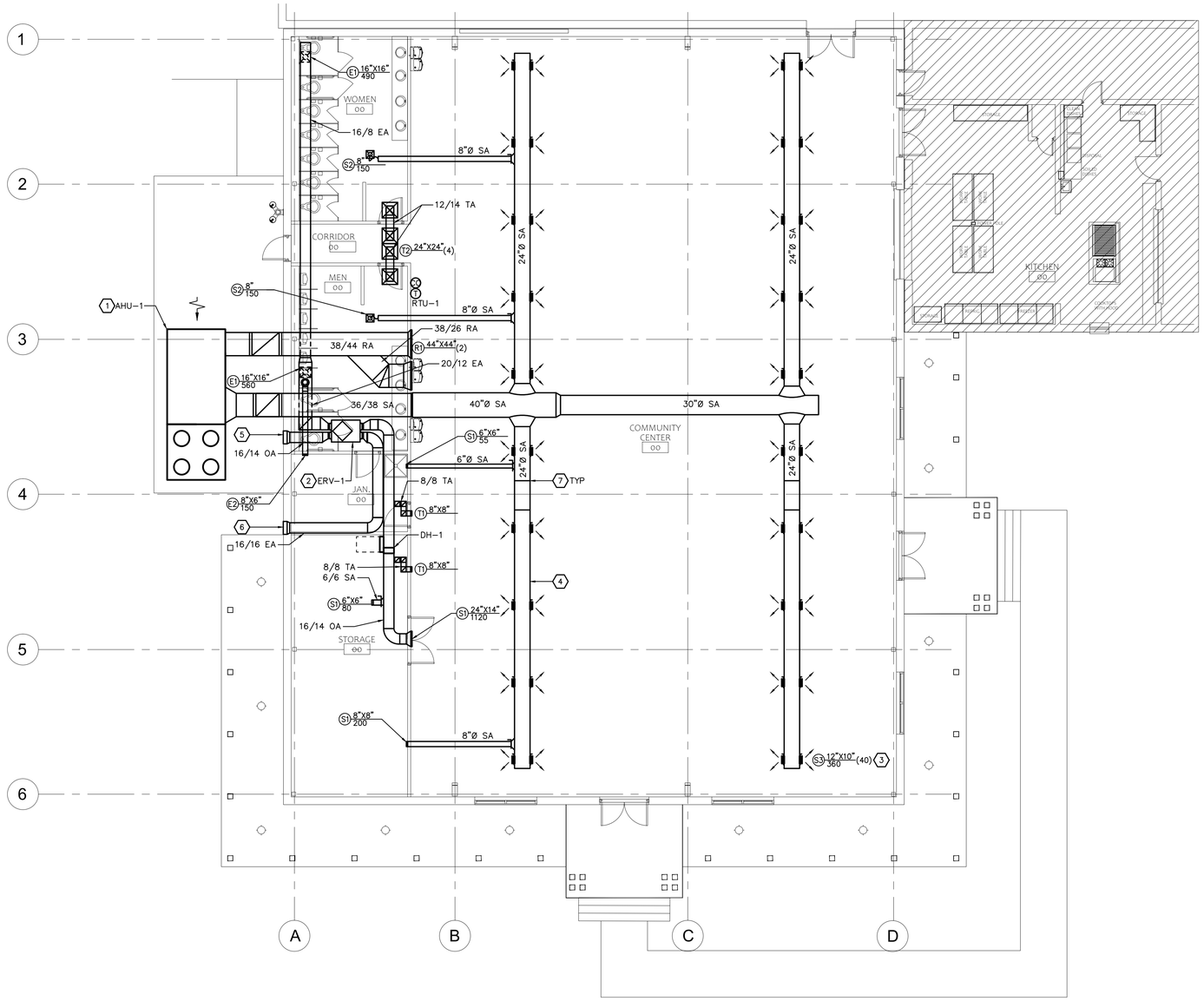

1
M10

FIRST FLOOR MECHANICAL PLAN

SCALE: 1/8"=1'-0"

NORTH

GENERAL NOTES:

1. PROVIDE SOUND BOOT ON ALL RETURN AIR GRILLES, SEE DETAIL.

WORK NOTES: X

1. PROVIDE GRADE MOUNTED AIR HANDLING UNIT RTU-1. SEE SCHEDULE FOR MORE DETAILS. PROVIDE EQUIPMENT HOUSEKEEPING PAD.
2. PROVIDE ENERGY RECOVERY VENTILATOR ERV-1. SEE SCHEDULE FOR MORE DETAILS. PROVIDE FULL SIZE SERVICE HATCH.
3. DIRECT SUPPLY DIFFUSER TO A 45° ANGLE FOR COMFORT COOLING.
4. ROUTE DUCTWORK TIGHT TO STRUCTURE.
5. 30/20 OUTSIDE AIR INTAKE LOUVER WITH GRAVITY BACKDRAFT DAMPER AND BIRD SCREEN. MINIMUM FREE AREA 48%. BASIS OF DESIGN IS RUSKIN MODEL ELF6375, GALVANIZED FINISH.
6. 30/20 EXHAUST AIR LOUVER WITH GRAVITY BACKDRAFT DAMPER AND BIRD SCREEN. MINIMUM FREE AREA 48%. BASIS OF DESIGN IS RUSKIN MODEL ELF6375, GALVANIZED FINISH.
7. 45 DEGREE TRANSITION TO FOLLOW STRUCTURE.

CAIRN DESIGN LLC
leading high performance building solutions

1805 Sheely Drive
Fort Collins, CO 80526

voice: (970)-286-7968

cairndesignllc.com

COLORADO REGISTERED
ROGER C. DALTON
No. 33293
PROFESSIONAL ENGINEER

Bowman

323 3RD AVENUE, #100
LONGMONT, CO 80501
TEL: 1.303.678.1108

BOWMAN.COM

NOTICE: DUTY OF COOPERATION Release of these plans contemplates further coordination among the owner, his contractor(s), the architect and engineers. Design and construction are complex. Although the architect and his consultants have performed their services with due care and diligence, they cannot guarantee perfection. Communication is imperfect, and every contingency cannot be anticipated. Any ambiguity or discrepancy discovered by the use of these plans shall be reported immediately to the architect. Failure to notify the architect compounds misunderstanding and increases the cost of correction. Failure to notify the architect of a defect in the plans shall release the architect from responsibility for all consequences. Changes made from the plans without consent of the architect are unauthorized, and shall relieve the architect/engineer of responsibility for all consequences caused by such changes.

BOWMAN PROJECT NO: 230325

PROJECT:

LOGAN COUNTY
COMMUNITY CENTER
ADDITION

SHEET TITLE:

FIRST FLOOR
MECHANICAL PLAN

ISSUE DATE:

12/16/22

REVISIONS:

10/14/22 DD SET
12/16/22 BID/PERMIT

PROJECT NO.:
2208

SHEET NO.

M10

As instruments of service, these drawings and the design represented are the permanent property of Cairn Design, LLC. Reproduction or use of these drawings other than for the project intended, without written consent from the Designer, is prohibited. Unauthorized use will be subject to legal action.

MECHANICAL AND PLUMBING SYMBOLS AND ABBREVIATIONS

PLUMBING

- COLD WATER
- HOT WATER
- HOT WATER RETURN
- GAS
- SANITARY OR GREASE VENT LINE
- SAN — SANITARY WASTE / DRAIN LINE
- GW — GREASE WASTE / DRAIN LINE
- GM — GAS METER
- WM — WATER METER
- RPBP (REDUCED PRESSURE) / RPZ (BACKFLOW PREVENTER)

PIPE FITTINGS

- ELBOW UP
- ELBOW DOWN
- TEE UP
- TEE DOWN
- CONCENTRIC REDUCER
- ECCENTRICAL REDUCER
- END CAP
- UNION
- FLANGED CONNECTION
- FLOW ARROW
- PIPE ANCHOR
- EXPANSION JOINT
- PIPE SLEEVE
- PIPE ALIGNMENT GUIDES
- FLEX CONNECTOR
- PIPE PITCH ARROW (DOWN IN ARROW DIRECTION)
- PRESSURE GAUGE
- AAV — AUTOMATIC AIR VENT
- COMPOUND GAUGE
- AIR CHAMBER
- SHOCK ABSORBER
- ELBOW
- TEE
- CO — CLEANOUT
- GCO — GRADE CLEANOUT
- FD — FLOOR DRAIN
- THERMOMETER

DUCT SYMBOLS

- OR — VOLUME DAMPER
- SUPPLY DUCT UP
- RETURN OR EXHAUST DUCT UP
- SUPPLY DUCT DOWN
- RETURN OR EXHAUST DUCT DOWN
- INTERNAL LINED DUCT
- FD — FIRE DAMPER (FD) IN DUCT
- FSD — COMBINATION FIRE/SMOKE DAMPER (FSD) IN DUCT
- SD — SMOKE DAMPER (SD) IN DUCT
- AP — ACCESS PANEL

VALVES

- SHUT-OFF VALVE
- VERTICAL SHUT-OFF/NEEDLE VALVE
- BALANCING VALVE
- CHECK VALVE
- PRESSURE REDUCING VALVE
- MAKEUP WATER VALVE
- FCV — FLOW CONTROL VALVE
- SAFETY/PRESSURE RELIEF VALVE
- AUTOMATIC AIR VENT
- TEMP/PRESSURE RELIEF VALVE
- CONTROL VALVE (TCV)
- THERMOSTATIC MIXING VALVE
- THROTTLING VALVE

TEMPERATURE CONTROL/MONITORING

- T_H — ROOM THERMOSTAT (HEAT)
- T_H,C — ROOM THERMOSTAT (HEAT/COOL)
- T_C — ROOM THERMOSTAT (COOL)
- S — SENSOR
- T — DUCT THERMOSTAT (PNEUMATIC)
- T_E — DUCT THERMOSTAT (ELECTRIC)
- H — HUMIDISTAT
- CO_2 — CARBON DIOXIDE SENSOR
- FS — FLOW SWITCH
- T — TEMPERATURE SENSOR
- FM — FLOW METER
- M — MOTORIZED DAMPER
- DPT — DIFFERENTIAL PRESSURE TRANSMITTER
- PETE'S PLUG
- VFD — VARIABLE FREQUENCY DRIVE
- TCP — TEMPERATURE CONTROL PANEL

AIR TERMINAL SYMBOLS

- T-BAR CEILING SUPPLY DIFFUSER
- T-BAR CEILING RETURN OR EXHAUST GRILLE
- 10"ø-250-3 — DENOTES RETURN OR EXHAUST TERMINAL THROAT SIZE, AIRFLOW AND QUANTITY. THE EXAMPLE TAG IS FOR A TERMINAL WITH A 10" DIAMETER NECK AND 250 CFM FLOW RATE. THE THIRD NUMBER INDICATES THAT THESE SIZE AND FLOW PROPERTIES ARE TYPICAL OF 3 AIR TERMINALS.
- 10"X12"-250-3 — DENOTES RETURN OR EXHAUST TERMINAL THROAT SIZE, AIRFLOW AND QUANTITY. THE EXAMPLE TAG IS FOR A TERMINAL WITH A 10"X12 RECTANGULAR NECK AND 250 CFM FLOW RATE. THE THIRD NUMBER INDICATES THAT THESE SIZE AND FLOW PROPERTIES ARE TYPICAL OF 3 AIR TERMINALS.
- 12"ø-300-2 — DENOTES SUPPLY TERMINAL THROAT SIZE, AIRFLOW AND QUANTITY. THE EXAMPLE TAG IS FOR A TERMINAL WITH A 12" DIAMETER NECK AND 300 CFM FLOW RATE. THE THIRD NUMBER INDICATES THAT THESE SIZE AND FLOW PROPERTIES ARE TYPICAL OF 2 AIR TERMINALS.
- 12"X12"-300-2 — DENOTES SUPPLY TERMINAL THROAT SIZE, AIRFLOW AND QUANTITY. THE EXAMPLE TAG IS FOR A TERMINAL WITH A 12"X12" RECTANGULAR NECK AND 300 CFM FLOW RATE. THE THIRD NUMBER INDICATES THAT THESE SIZE AND FLOW PROPERTIES ARE TYPICAL OF 2 AIR TERMINALS.

ABBREVIATIONS

AD	AREA DRAIN
AFC	AUTOMATIC FLOW CONTROL
AFF	ABOVE FINISHED FLOOR
AHR	AIR HOSE REEL
AHU	AIR HANDLING UNIT
ALT	ALTERNATE
AP	ACCESS PANEL
AS	AIR SEPARATOR
BD	BLOWDOWN
BDD	BACKDRAFT/PRESSURE RELIEF DAMPER
BTU	BRITISH THERMAL UNIT
BV	BALANCE VALVE
CB	CATCH BASIN
CFH	CUBIC FEET PER HOUR
CFM	CUBIC FEET PER MINUTE
CI	CAST IRON
CL	CENTERLINE
CO	CLEANOUT
COND	CONDENSATE
CONV	HYDRONIC CONVECTOR
CUH	CABINET UNIT HEATER
CW	COLD WATER
DB	DRY BULB
DF	DRINKING FOUNTAIN
DIA, ø	DIAMETER
DIFF	DIFFUSER
DS	DOWNSPOUT
DXC	DIRECT EXPANSION COOLING COIL
EA	EXHAUST AIR
EAT	ENTERING AIR TEMPERATURE
EBBR	ELECTRIC BASE BOARD RADIATION
EC	ELECTRICAL CONTRACTOR
EG	EXHAUST GRILLE
ECONV	ELECTRIC CONVECTOR
ECUH	ELECTRIC CABINET UNIT HEATER
EF	EXHAUST FAN
ELEC	ELECTRICAL
ELEV	ELEVATION
EDM	END OF MAIN DRIP
EPUH	ELECTRIC PROPELLER UNIT HEATER
ER	EXHAUST REGISTER
ERCP	ELECTRIC RADIANT CEILING PANEL
ESP	EXTERNAL STATIC PRESSURE
EWC	ELECTRIC WATER COOLER
EWH	ELECTRIC WATER HEATER
ET	EXPANSION TANK
EXTG, (E)	EXISTING
FD	FLOOR DRAIN OR FIRE DAMPER
FPVAV	FAN POWERED VAV
FOB	FLAT ON BOTTOM
FSD	COMBINATION FIRE/SMOKE DAMPER
FTR	HYDRONIC FINNED TUBE RADIATION
GC	GENERAL CONTRACTOR
GCO	GRADE CLEANOUT
GEN	GENERAL
GI	GREASE INTERCEPTOR
HB	HOSE BIBB
HTG	HEATING
HW	HOT WATER
ID	INTERNAL DIAMETER
INV. EL.	INVERT ELEVATION
LAT	LEAVING AIR TEMPERATURE
LAV	LAVATORY
MBH	1000 BTU/HOUR
MECH	MECHANICAL
MC	MECHANICAL CONTRACTOR
MH	MANHOLE
MS	MOP SINK
MUV	AUTOMATIC MAKE-UP VALVE
MV	MIXING VALVE
NC	NORMALLY CLOSED
NO	NORMALLY OPEN
NTS	NOT TO SCALE
OA	OUTSIDE AIR
OBD	OPPOSED BLADE DAMPER
OD	OUTSIDE DIAMETER
OFD	OVERFLOW DRAIN
OSD	OPEN SITE DRAIN
PC	PLUMBING CONTRACTOR
PFHX	PLATE AND FRAME HEAT EXCHANGER
PIV	POST INDICATOR VALVE
PLBG	PLUMBING
PRV	PRESSURE REDUCING VALVE
PUH	PROPELLER UNIT HEATER
RA	RETURN AIR
RCP	RADIANT CEILING HEATING PANEL
RCNP	REINFORCED CONCRETE PIPE
RD	ROOF DRAIN
RECIRC	RECIRCULATING
RG	RETURN GRILLE
RPZ	REDUCED PRESSURE BACKFLOW PREVENTER
RR	RETURN REGISTER
RV	ROOF INTAKE VENT
RRV	ROOF RELIEF VENT
SA	SUPPLY AIR
SAN	SANITARY
SD	SMOKE DAMPER
SG	SUPPLY GRILLE
SHDR	SHOWER DRAIN
SK	SINK
SR	SUPPLY REGISTER
SS	STAINLESS STEEL
STHX	SHELL AND TUBE HEAT EXCHANGER
TCC	TEMPERATURE CONTROL CONTRACTOR
TCP	TEMPERATURE CONTROL PANEL
TG	TRANSFER GRILLE
TO	TRANSFER OPENING
TP	TRAP PRIMER LINE
TYP	TYPICAL
UR	URINAL
VAV	VARIABLE AIR VOLUME
VCP	VITRIFIED CLAY PIPE
VFD	VARIABLE FREQUENCY DRIVE
VS	VENT STACK
VTR	VENT THRU ROOF
W	WASTE
WB	WET BULB
WC	WATER CLOSET
WCO	WALL CLEANOUT
WH	WALL HYDRANT
WS	WASTE STACK

PUMPS

- PUMP

HYDRONIC BASEBOARD HEATERS

- CASED FINNED TUBE BASEBOARD RADIATOR
- H-12'/1.5/2 — DENOTES HYDRONIC BASEBOARD HEATER SIZE, FLOW RATE IN GALLONS PER MINUTE (GPM) AND QUANTITY. THE EXAMPLE TAG IS FOR A HEATER WITH 12 LINEAR FEET OF ACTIVE ELEMENT AND A FLOW RATE OF 1.5 GPM. THE THIRD NUMBER INDICATES THAT THESE SIZE AND FLOW PROPERTIES ARE TYPICAL OF 2 BASEBOARD HEATERS.

GENERAL

- OR — BREAK-LINE SYMBOL - INDICATES AN OBJECT, OR OBJECTS, CONTINUES BUT THE CONTINUATION BEYOND THE SYMBOL IS NOT SHOWN.

NOTE: NOT ALL SYMBOLS OR ABBREVIATIONS ARE USED FOR ALL PROJECTS.

General HVAC Specifications:

Definitions

Contractor shall mean the Mechanical Contractor.

AHJ shall mean Authority(s) Having Jurisdiction over the project.

Contract Documents shall mean these drawings and specifications along with any directive or changes issued to said documents.

General

The general conditions of the architectural general specifications shall apply to this section.

Scope

The contractor shall furnish all materials, labor, equipment and services to provide, install and commission the mechanical systems presented in the construction documents in a complete, operable, and AHJ approved manner that complies with the construction documents. The mechanical systems shall include the following as well as any other systems depicted or listed in the contract documents.

1. Heating, ventilation, air conditioning systems
2. Operating and temperature control systems
3. Condensate piping

Site Inspections / Verification

Contractor shall thoroughly inspect the job site to determine existing conditions and conflicts between the construction documents and plans prior to biding. Utility connection points shown on the plans are approximate and shall be field verified by the contractor. Contractor shall promptly report any conflicts to the mechanical engineer before proceeding with their bid or work. Contractor shall be responsible for any costs or delays arising from contractor's failure to thoroughly verify and report site conditions, conflicts or utility locations.

Plan Inspection / Verification

Contractor shall thoroughly inspect the plans, for all trades, to determine if any conflicts exist. All conflicts are to be reported to the Architect / Engineering promptly.

Drawings and Intent

These drawings are diagrammatic in nature, and may not show all necessary valves, fittings, supports, dampers, insulation, offsets, etc. The contractor shall furnish complete and operable systems that meet the design intent and are in compliance with the construction documents. The contractor shall provide and install all necessary valves, fittings, supports, dampers, insulation, offsets, etc. as though they were explicitly called out in the construction documents. The contractor shall include these necessary items in their bid / contract and shall not charge any additional fees, beyond the bid / contract amount, for these items.

These drawings are diagrammatic in nature and shall not be scaled for exact measurements. Contractor shall refer to the architectural drawings for locations and measurements not given on these drawings.

Coordination

Contractor shall be responsible for coordinating their work with all other trades. Contractor shall maintain their installation pace and timeframes in accordance with the General Contractor's pacing and timeframes so as not to delay the project or incur additional costs.

Permits and Licenses

Contractor shall apply for, pay for and obtain all required permits and licenses for this project. Contractor shall be responsible for all fees and taxes for their work, equipment, materials, permits and licenses.

Code Requirements

Contractor shall comply with all federal, state and local code requirements, amendments and regulations as determined by the authority having jurisdiction (AHJ). Contractor shall comply with utility company regulations.

Materials and Workmanship

All materials and equipment, furnished for this project, shall be new and without blemish or defect unless otherwise specified in these drawings and specifications. All work, furnished for this project, shall be completed by skilled workers trained and experienced in the work they are doing. All work shall be completed with high quality workmanship and in a neat manner. All work shall conform to the highest practices common in the industry, manufacturer's requirements and specifications, the construction documents, and industry standards.

Drawings and Specifications

The materials and equipment presented in the construction documents are the basis of design. These materials and equipment represent the designed performance, sizing, configuration, connections, form, aesthetics and function required. Contractor shall not substitute alternate materials, or equipment without engineer's written approval.

Alternate Materials and Equipment

Any requests for the substitution of alternate materials or equipment must be submitted to the engineer, for review, 2 weeks prior to bidding the project. Contractor shall be responsible for any costs required due to the substitution of approved alternate materials and equipment, including costs to other trades. All submissions shall be in accordance with the section titled "Shop Drawings and Submittals" in these specifications. Approval of an alternate will not alleviate the contractor of the responsibility to provide full and complete systems that meet the design intent and the requirements of the construction documents, even if the approved alternate does not meet these requirements.

Shop Drawings and Submittals

Contractor shall prepare and submit, to the General Contractor, shop drawings, cut sheets and submittals for all equipment, services, and materials to be provided and installed in accordance with the construction documents. General Contractor shall review these submittals for compliance with the construction documents before sending them to the engineer for review. If the General contractor determines that the equipment, services and materials, as depicted in the submittals, comply with the contract documents, the General Contractor shall then submit the submittals to the engineer for review along with a cover letter from the General Contractor indicating they have reviewed the submittals and found them to be in compliance with the contract documents. All submissions must be provided to the engineer a minimum of 2 weeks prior to ordering any material or equipment and 2 weeks prior to providing any services.

This same submittal procedure shall be utilized for any requests for the substitution of alternate materials and equipment.

Complete and Functional Systems

Contractor shall provide and install complete and fully functional systems which produce the performance characteristics (as installed) required by the construction documents. These systems shall include all necessary components including dampers, access doors, controls,

Testing and Balancing

All HVAC and hydronic systems shall be tested, adjusted and balanced by a third party testing, adjusting and balancing (TAB) firm not connected to the contractor by financial, ownership, common employee or other like circumstances. The TAB firm shall be NEBB or AABC certified. Mechanical contractor shall engage and pay for the TAB firm's services. All balancing shall be in accordance with NEBB procedures and shall be reported on NEBB or approved equal forms.

All air systems shall be balanced within +/- 5% of the airflow shown on plans. Contractor shall supply and install any additional dampers required for balancing for no additional charge. Contractor shall make any repairs necessary for the balancing for no additional charge.

All hydronic systems shall be balanced within +/- 5% of the flow shown on plans. Contractor shall supply and install any additional valves or fittings required for balancing at no additional charge. Contractor shall make any repairs necessary for the balancing for no additional charge.

At a minimum, balance report shall include gross airflow (Supply, Return, Exhaust, Outside Air, etc.) for each system, individual air terminal airflow, system static pressures, equipment operating characteristics (RPM, amps, volts, temperature difference, etc.), equipment and drive physical characteristics, all hydronic flows and pressure drops, all system temperatures, pump nameplate data, equipment and drive nameplate data and motor starter data.

A copy of final balance report shall be provided to the mechanical engineer two weeks prior to contractor's submittal for final payment or final building department inspection, whichever occurs first.

Controls

Contractor shall provide and cause to be installed all controls and control wiring for the HVAC systems in accordance withe equipment manufacturer's recommendations, the National Electrical Code as adopted and amended by the AHJ and any local codes or amendments.

Ductwork

All ductwork shall be constructed and reinforced and installed in accordance with the latest edition of SMACNA's HVAC DUCT CONSTRUCTION STANDARDS METAL AND FLEXIBLE and the International Mechanical Code.

Exposed round ductwork shall be of the continuous seam spiral type with associated spiral fittings.

Concealed round ductwork may be spiral seam ductwork or snaplock duct.

Duct Size

Duct sizes shown on the plans are inside clear dimensions and do not include an allowance for duct liner or other obstructions.

Flex Duct

Flex duct may only be used for connections to supply air terminals. Flex duct shall be insulated to a minimum of R6.2, have a wire helix reinforced core, and be encased in an outer foil scrim jacket. The maximum length shall be limited to 6 feet of flex duct. Flex duct shall be listed to UL 181 standard and shall be Class 1 duct.

Duct Insulation

Duct insulation shall be as follows unless otherwise noted on the plans.

Rectangular make-up air ducts in unconditioned spaces within the building envelope shall be wrapped with Johns Manville Microlite FSK foil scrim craft duct insulation with a minimum rating of R6 as installed. Do not internally line make-up duct.

Rectangular supply and return air ducts within the building envelope shall be lined with 1.5" thick Johns Manville Lincoustic duct liner with a minimum rating of R6 as installed.

Spiral ductwork shall be internally lined with Johns Manville Spiracoustic 1.5" duct liner with a minimum rating of R6 as installed.

Concealed round supply, return, and make-air ducts within the building envelope shall be externally insulated with 1.5" thick insulation having a minimum R value of R6. The insulation shall be enclosed in a foil scrim jacket.

Rectangular supply and return duct, outside the building envelope, shall be lined with Johns Manville Lincoustic duct liner with a minimum rating of R12 as installed.

Rectangular make-up air duct, outside the building envelope, shall be wrapped with Johns Manville Microlite FSK foil scrim craft duct insulation with a minimum rating of R12 as installed, unless otherwise noted on the plans. Do not internally line make-up duct. Cover and seal exterior duct insulation with Ideal Seal 777 aluminum embossed cladding or approved equal.

Duct Supports and Hangers

Furnish all required hangers and supports for the completion of contractors scope of work in accordance with code, AHJ, and material / equipment manufacturer's requirements.

Duct Sealing

Concealed duct: All longitudinal and transverse seams shall be externally sealed air tight with Carlisle Iron-Grip 601 or approved equal.

Exposed spiral duct: All exposed spiral duct shall be internally sealed by gaskets or mastics approved and listed for the application. Do not externally seal exposed spiral duct.

Flexible duct: All flexible duct connections shall be sealed with two layers UL-181-B-FX duct tape applied under the duct clamp.

Warranty

All services, work, equipment and materials supplied for this project shall include a full 1 year warranty covering all materials and labor from the date of owner's final acceptance. In addition, contractor will provide full manufacturer's warranty to the owner in the event that the manufacturer's warranty is longer or more favorable to the owner.

Temporary Services

The HVAC systems provided and installed in accordance with the construction documents shall not be used for temporary heating, cooling and ventilating during the construction phase.

Any HVAC systems used for temporary heating, cooling and ventilating shall have their filters replaced, be fully cleaned and returned to an as-new state prior to turning the project over to the owner's control.

Equipment Protection

Contractor shall be responsible for protecting all fixtures, materials and equipment during construction and until final acceptance by the owner.

Dampers

Quadrant type locking balancing dampers shall be provided in all supply air duct branches off of the main supply trunk(s).

Delivery, Storage and Handling

Contractor shall be responsible for the delivery, storage and handling of all parts, materials, equipment and fixtures within the scope of the HVAC systems.

Flexible Connectors

Duct connections to mechanical equipment shall be made utilizing a flexible connector listed and approved for the application.

Duct Access Doors

Furnish duct access doors to access and service all fire and smoke dampers as well as any other equipment installed within the ductwork which requires access for servicing.

Condensate Drain

Trap all condensate drains in accordance with manufacturer's requirements and adopted codes. Route condensate lines to the nearest floor drain or other approved discharge location. Maintain an air gap at drain termination point. All air gaps shall be in accordance with manufacturer's requirements or code requirements, whichever is more stringent.

Operation and Maintenance Manuals

Save, compile and bind three copies of all operation and maintenance manuals as well as specifications, warranties and cut sheets for all HVAC systems, components, and materials. Provide the bound manuals to the project coordinator, for the owner's use, before project closeout.

Owner Training

Provide onsite training on all HVAC systems and equipment to the owner or owner's designees at a time that is acceptable to the owner. This training shall cover operation and maintenance and shall be provided at no additional cost.

Equipment Identification - Labeling

All equipment, pipes, components, dampers and valves shall be identified, labeled and tagged in accordance with the International Mechanical Code as adopted and amended by the AHJ.

Disconnects and Starters

Contractor shall supply electrical disconnects and motor starters for all equipment provided by them. Electrical contractor shall install and hook-up all electrical disconnects and motor starters.

Cleaning

Contractor shall provide final cleaning of all systems and equipment provided by the contractor. Cleaning shall be provided immediately prior to handing the project over to the owner. Cleaning to be to owner's satisfaction

Cutting and Patching

Contractor shall be responsible for all cutting, patching, grinding, welding, brazing and soldering necessary for the completion of their work.

Contractor shall be responsible for any repairs to finishes necessitated by their work.

Work Area - Cleanliness

Contractor shall maintain the work area in a neat, clean and safe manner at all times. No excess materials are to be stored in the work area without the project manager's prior approval.

Duct Transitions and Changes of Direction

All rectangular supply and return ductwork changes in direction greater than 45° shall be fully radiused with a radius of 1.5 times the diameter. Where a radius duct is not possible single width turning vanes may be used in a mitered fitting.

All duct transitions which enlarge in the direction of flow shall be formed with an angle of 15° or less.

All duct transitions which reduce in the direction of flow shall be formed with an angle of 30° or less.

HVAC Piping - Insulation

All field installed HVAC piping serving refrigeration lines shall be insulated with closed cell elastomeric pipe insulation. The insulation shall conform to the specifications listed in the Minimum Pipe Insulation Thickness table on this sheet.

All other field installed HVAC piping, that serves as part of a heating or cooling system, shall be insulated with jacketed fiberglass pipe insulation. The insulation shall have a protective jacket with factory applied vapor barrier. Vapor barrier shall have a permeability rating of 0.02 perms. Jacket shall have a self sealing lap seam. The insulation shall conform to the specifications listed in the Minimum Pipe Insulation Thickness table on this sheet.

Record Set of Drawings

Contractor shall maintain a current and accurate marked-up set of drawings indicating all systems, components, materials, routing, etc. as installed. All deviations from the as designed construction plans are to be noted in red. Provide the marked-up record set to the owner and a Provide an electronic copy, of the record set, to mechanical engineer a minimum of one week prior to the final inspection. The electronic copy shall be an Adobe PDF file. The electronic copy shall be in color, shall be legible and shall be in a format and size that is acceptable to the mechanical engineer.

Commissioning of Building Systems

All heating, ventilation, air conditioning, refrigeration and service water heating systems are to be commissioned, by an approved agency. Commissioning firm shall develop a commissioning plan and submit plan to mechanical engineer for approval, prior to starting any commissioning. Commissioning shall fully comply with the requirements of IECC C408.2. All deficiencies noted during commissioning shall be corrected and the affected systems shall be re-commissioned. An electronic copy (pdf format) of the final commissioning report shall be submitted to the building owner, mechanical engineer and architect for review and approval. The report shall be submitted, for review, a maximum of 30 days after final inspection. The contractor shall be responsible for ensuring these requirements are met. The contractor shall engage and pay for an approved commissioning firm to perform the commissioning. Firms wishing to provide commissioning shall submit qualifications, samples of work on similar projects and a scope of work description to mechanical engineer for prior approval.

Discrepancies Between General HVAC Specifications and Plans

When there is a discrepancy between these General HVAC Specifications and a specific note, detail or specification, on the mechanical plans, the note, detail or specification, on the mechanical plans, shall take precedence.

Provide, Furnish and Install

When the plans say Provide or Furnish an item or material the contractor shall interpret these terms to include the installation of the item or material in question, unless otherwise specified on the plans.

Request for Information (RFI):

The General Contractor may submit a request for information (RFI) when it is necessary to clarify the information presented in the mechanical plans or to resolve a conflict in the mechanical design. For a project where a General Contractor is not engaged, the prime contractor in charge of the construction or management of the project may submit RFI's. RFI's shall be submitted to the mechanical engineer (ME) for review and response. Allow a minimum of seven working days for a response to submitted RFI's.

The following RFI's may be rejected without action:

-Requests for approval of submittals.

-Requests for approval of substitutions.

-Requests for approval of contractor's methods and means.

-Requests for information already contained in the plans and specifications.

-Incomplete or improperly prepared RFI's.

-Excessive or unnecessary RFI's (as determined by the mechanical engineer).

RFI's shall clearly state the specific information or clarification that is being requested. RFI's shall reference the specific plan item, detail, field condition, and / or specification in question and shall fully describe the conflict or ambiguity. RFI's shall include photos, sketches, coordination drawings, shop drawings, measurements, dimensions, descriptions, product data, etc. as is necessary to fully describe the request and any proposed resolutions.

RFI's shall include two proposed resolutions in the RFI submittal. The proposed resolutions shall include a detailed description of the resolution, the impacts on construction timeline, and the impacts on the project costs. In addition, contractor shall include a detailed description of the impact of the proposed resolutions to other trades and the project owner.

MINIMUM PIPE INSULATION THICKNESS (INCHES)					
Fluid Operating Temperature Range (°F)	Insulation Conductivity		Nominal Pipe or Tube Size (Inches)		
	Conductivity Btu*in./(h*ft²*°F)	Mean Rating Temperature (°F)	<1	1 to <1.5	1.5 to <4
201–250	0.27–0.30	150	2.5	2.5	2.5
141–200	0.25–0.29	125	1.5	1.5	2
105–140	0.21–0.28	100	1.0	1	1.5
40–60	0.21–0.27	75	0.5	0.5	1.0
<40	0.20–0.26	50	0.5	1	1.0

APPLICABLE CODES:

2006 INTERNATIONAL BUILDING CODE (IBC)
2006 INTERNATIONAL MECHANICAL CODE (IMC)
2018 INTERNATIONAL PLUMBING CODE (IPC)
2006 INTERNATIONAL FUEL GAS CODE (IFGC)
2020 NATIONAL ELECTRIC CODE (NEC)
2006 INTERNATIONAL ENERGY CONSERVATION CODE (IECC)
2006 INTERNATIONAL EXISTING BUILDING CODE (IEBC)
2006 INTERNATIONAL FIRE CODE (IFC)
LOGAN COUNTY, CO LOCAL AMENDMENTS TO THE ABOVE CODES
-ADOPTED LOCAL AND STATE HEALTH DEPARTMENT REGULATIONS
-ALL OTHER RELEVANT CODES ADOPTED BY THE AHJ(S)
-STATE OF COLORADO LOCAL AMENDMENTS TO THE ABOVE ELECTRICAL, GAS, AND PLUMBING CODES

MECHANICAL SHEET INDEX

SHEET NUMBER	SHEET TITLE
M-0.1	HVAC GENERAL SPECIFICATIONS & LEGEND
M-1	HVAC PLAN
M-2	HVAC ROOF PLAN
M-3	HVAC SCHEDULES & DETAILS
M-4	HOOD SCHEDULES
M-5	HOOD DETAILS
M-6	HOOD FAN SCHEDULES
M-7	HOOD FAN DETAILS
M-8	HOOD CONTROL & EXHAUST DUCT DETAILS
M-9	HOOD FAN CONTROL DETAILS

EXISTING CONDITIONS:

The existing conditions (systems, construction, dimensions, layout, sizes, utilities, etc.) presented in these plans relies on a combination of one or more of the following: owner representations, existing plans, field surveys, and other data provided to the engineer. Existing conditions may vary from what is depicted in these plans. The mechanical engineer shall not be liable for errors in existing conditions or omissions of existing conditions on these plans. Contractor shall be responsible for providing fully functional HVAC systems that meet the design intent. Therefore, contractor shall carefully and thoroughly examine the existing building and field verify, to their satisfaction, that the existing conditions (systems, construction, dimensions, layout, sizes, utilities, etc.) match the plans prior to contracting for any work on the project. Additional compensation will not be provided for contractor's failure to verify field conditions.

COLORADO LICENSED
BOBBY SHANE FRY
51817
12/16/2022
PROFESSIONAL ENGINEER

CAIRN DESIGN LLC
leading high performance building solutions
1805 Sheely Drive
Fort Collins, CO 80526
voice: (970)-286-7968
cairndesignllc.com

FRY ENGINEERING
FRY ENGINEERING, INC.
970-658-3665
SHANE@FRYENG.COM
WWW.FRYENG.COM
2702 BIANCO DR.
FORT COLLINS, CO 80521

The mechanical drawings and designs herein are instruments of professional service and are intended for one-time use in the construction of this project. They are and shall remain the sole property of Fry Engineering, Inc. They may not be reproduced or used for any other purpose without express written permission from Fry Engineering, Inc.
Copyright 2022, Fry Engineering, Inc.

PROJECT:

LOGAN COUNTY COMMUNITY CENTER ADDITION

SHEET TITLE:

HVAC GENERAL SPECIFICATIONS & LEGEND

ISSUE DATE:

BID/PERMIT
12/16/2022

REVISIONS:

-

PROJECT NO.:

2208

SHEET NO.

M-0.1

As instruments of service, these drawings and the design represented are the permanent property of Cairn Design, LLC. Reproduction or use of these drawings other than for the project intended, without written consent from the Designer, is prohibited. Unauthorized use will be subject to legal action.

GENERAL NOTES:

1. This drawing is diagrammatic and is intended to convey the general intent of the systems represented. Not all valves, fittings, offsets, materials, dampers or components are shown. Contractor shall furnish and install all components, offsets, parts, materials, dampers and labor necessary to provide complete, functional, code compliant HVAC systems in accordance with the design intent.
2. Maintain a minimum of 10 feet of horizontal clearance from exhaust outlets, flue terminals, and plumbing vents to all air intakes into the building.
3. Furnish balancing dampers for all take–off / runout supply air ducts.
4. Coordinate all duct, grille, register and diffuser elevations / locations with architectural drawings, building structure, reflected ceiling plan, and other trades.
5. Supply, return, and make–up air ductwork on this sheet is 1" pressure class unless otherwise noted.
6. Supply, return, and make–up air ductwork on this sheet is seal class A unless otherwise noted.
5. Take–off / runout ducts shall match the neck size of the grill / register / diffuser served, unless otherwise noted.
6. MC shall submit a complete and certified copy of the final air balance report to the mechanical engineer for approval. The report shall be submitted a minimum of one week prior to the final mechanical inspection.
7. MC to transition ductwork to the full size of the HVAC equipment inlet and outlets, served by the ductwork. Not all transitions are shown on the plans. (Typical.)
8. MC to field verify all ductwork routing, planned elevations, sizes and clearances prior to ordering or fabricating ductwork and fittings. Notify mechanical engineer of any conflicts or discrepancies, that cannot be resolved by the MC, and await direction.
9. MC shall visit the site and confirm all layout's and clearances prior to installing, ordering or fabricating any equipment, materials or parts. Immediately notify mechanical engineer of any conflicts and await resolution. If the mechanical contractor fails to notify the mechanical engineer of any conflicts and await resolution, the mechanical contractor shall be obligated to make any required changes, as directed by the mechanical engineer, without additional charge to the owner or engineer.
10. Mechanical contractor, controls contractor, and air balancing contractor shall coordinate all mechanical commissioning and start–up work. In the event mechanical engineer is not satisfied with the operation or performance of the HVAC systems, that are the scope of this project, mechanical contractor, controls contractor and air balancing contractor shall coordinate, cooperate and work together to satisfy mechanical engineer's concerns with the HVAC systems without any additional charges. This cooperating arrangement shall last for a minimum period of one year after owner's final acceptance of the work.
11. All user operable thermostats, temperature selectors, and temperature controls are to be mounted a maximum of 48" AFF, unless otherwise noted. Coordinate exact thermostat locations with owner.
12. HVAC unit thermostat settings are to be in accordance with HVAC UNIT THERMOSTAT SETTINGS table on Sheet M–3, unless otherwise noted.
13. Patch and seal all ductwork openings that are not being used / reused.
14. All interior exposed round make–up air ductwork, supply ductwork, and return ductwork, on this sheet, is spiral ductwork with spiral fittings.
15. All new rectangular make–up air ductwork (supply and intake) is to be externally insulated (see Sheet M–0.1). Make–up ductwork within the building envelope shall be insulated to R–6 minimum as installed. Make–up ductwork outside the building envelope shall be insulated to R–12 minimum as installed. (Typical)

TESTING, ADJUSTING, AND BALANCING SCOPE:

Balancing contractor shall test, adjust and balance the mechanical systems, serving the space under construction, and provide a full balancing report. Testing, adjusting and balancing shall include all air and hydronic systems. See Testing and Balancing on Sheet M–0.1 for general requirements.

SHEET DETAIL NOTES: (x)

1. MC to field verify hood exhaust riser locations, supply riser locations, and exhaust duct routing prior to ordering / manufacturing of hood. Adjust exact riser locations on hood accordingly.
2. Route double–wall reduced clearance factory built grease duct from hood riser to exhaust fan on roof. Field verify layout prior to fabrication / ordering. Duct to extend a minimum of 18" through the roof. Provide cleanout / access doors for portions of the grease duct that are inaccessible from the intake or discharge of the grease duct, at each change of direction, and at each floor level of the building. Grease duct to be 14" nominal (internal) diameter. Grease duct to be Captive–Aire Systerms, Inc model DW–2R.
3. Type I Hood to overhang cooking surface in accordance with ELT listing (UL 710). Overhang a minimum of 6" on front and on open ends of hood.
4. Provide and install 20 gauge stainless steel wall flashing on back wall and side walls (where present) at exhaust hood. Stainless flashing finish, grade and type shall match the finish, grade and type of the hood. At a minimum, stainless steel wall flashing shall cover walls under hood, behind hood, and all other areas the are less than or equal to 18" from hood.
5. The Type 1 Hood fire suppression system is to be designed, furnished and installed by Fire Suppression Contractor. Install suppression system in hood utility cabinet. (Fire suppression system contractor to provide all design work and engineering for the fire suppression system. Fire suppression contractor to pay for and obtain all necessary permits for the fire suppression system.)
6. Utility cabinet mounted electrical control package furnished by MC and connected & installed by Electrical Contractor.
7. Make–up air heater HMI control station. HMI provided by MC and installed & connected by EC. Approximate location shown. Electrician to field verify installation location with owner, MC, and GC.
8. Field verify routing of make–up air duct in kitchen. Offset make–up air duct as necessary around structural items. (Typical).
9. Direct–fired heated make–up air unit with evaporative cooling (SF1). SF1 is located above the drop ceiling. Fan mounting to be per structural engineering drawings. Fan mounting is to incorporate spring vibration isolators. MC to size, select, and furnish isolators to match the fan's weight and provide one inch deflection. Field verify exact fan location to maintain all required clearances and to meet structural requirements.
10. Route make–up air intake duct up through the roof above. Field verify exact duct routing. The horizontal make–up air intake duct is 30"x34". The vertical make–up air intake duct is 20"x20". Transition between 20"x20" duct and 30"x34" duct in the vertical duct run below the roof deck.
11. Extend and connect 10"x28" PSP supply riser to 26"x14" make–up air duct above. Balance to 573 CFM. (Typical of 3)
12. Rework existing HVAC ductwork around SF1, as necessary, for the installation of SF1 and new make–up air ductwork.
13. Remove and reinstall existing ceiling grills, registers, and diffusers, as required, for the replacement of the existing drop ceiling with a new drop ceiling. (Typical)

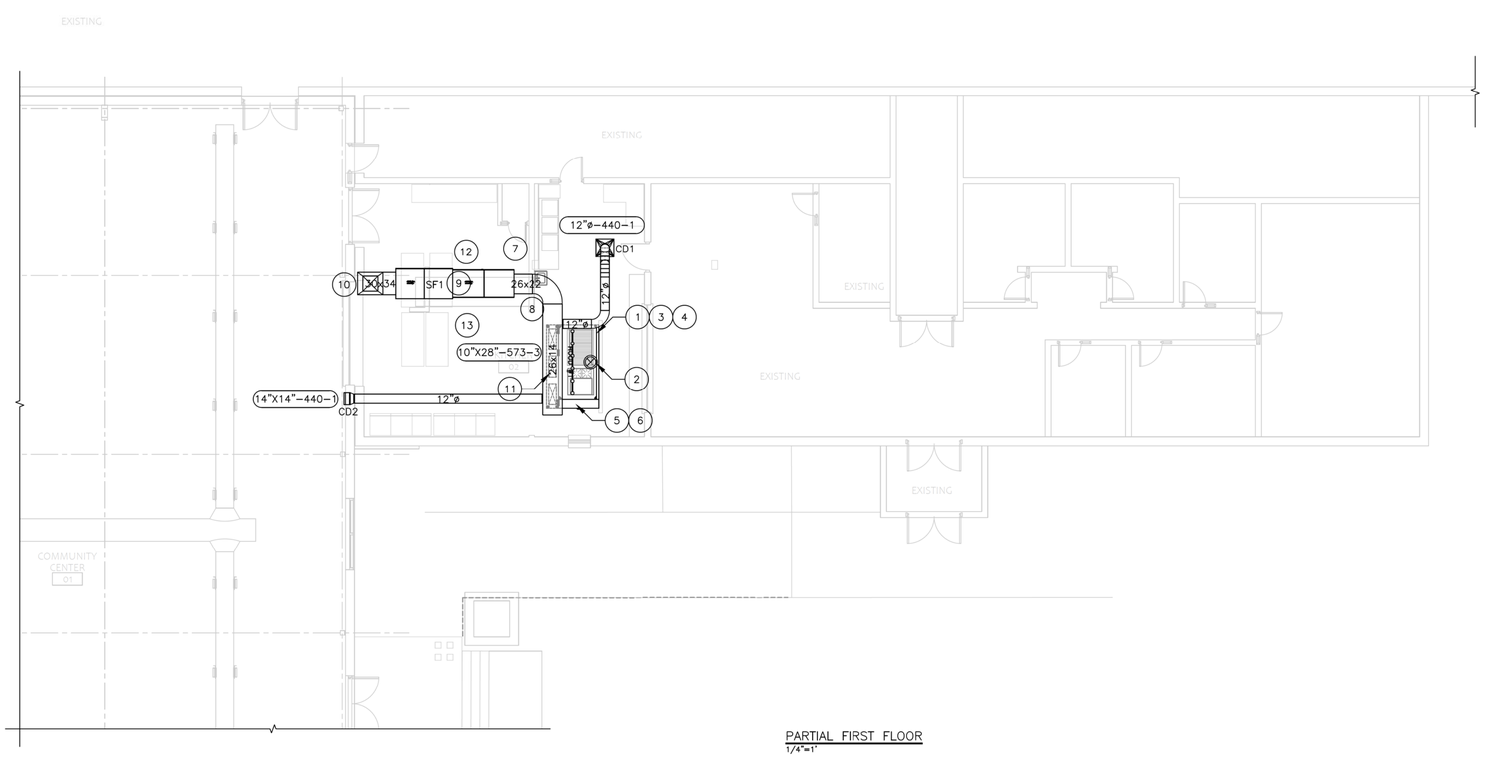

PARTIAL FIRST FLOOR
1/4"=1'

SHEET LEGEND

OR —— NEW WORK

OR —— EXISTING TO REMAIN

CAIRN DESIGN LLC
leading high performance building solutions

1805 Sheely Drive
Fort Collins, CO 80526

voice: (970)-286-7968

cairndesignllc.com

COLORADO LICENSED
BOBBY SHANE FRY
51817
12/16/2022
PROFESSIONAL ENGINEER

FRY ENGINEERING

FRY ENGINEERING, INC.
970-658-3665
SHANE@FRYENG.COM
WWW.FRYENG.COM
2702 BIANCO DR.
FORT COLLINS, CO 80521

The mechanical drawings and designs herein are instruments of professional service and are intended for one-time use in the construction of this project. They are and shall remain the sole property of Fry Engineering, Inc. They may not be reproduced or used for any other purpose without express written permission from Fry Engineering, Inc.
Copyright 2022, Fry Engineering, Inc.

PROJECT:

LOGAN COUNTY
COMMUNITY CENTER
ADDITION

SHEET TITLE:

HVAC PLAN

ISSUE DATE:

BID/PERMIT
12/16/2022

REVISIONS:

-

PROJECT NO.:
2208

SHEET NO.

M-1

As instruments of service, these drawings and the design represented are the permanent property of Cairn Design, LLC. Reproduction or use of these drawings other than for the project intended, without written consent from the Designer, is prohibited. Unauthorized use will be subject to legal action.

GENERAL NOTES:

1. This drawing is diagrammatic and is intended to convey the general intent of the systems represented. Not all valves, fittings, offsets, materials, dampers or components are shown. Contractor shall furnish and install all components, offsets, parts, materials, dampers and labor necessary to provide complete, functional, code compliant HVAC systems in accordance with the design intent.
2. Maintain a minimum of 10 feet of horizontal clearance from exhaust outlets, flue terminals, and plumbing vents to all air intakes into the building.
3. Furnish balancing dampers for all take–off / runout supply air ducts.
4. Coordinate all duct, grille, register and diffuser elevations / locations with architectural drawings, building structure, reflected ceiling plan, and other trades.
5. Supply, return, and make–up air ductwork on this sheet is 1" pressure class unless otherwise noted.
6. Supply, return, and make–up air ductwork on this sheet is seal class A unless otherwise noted.
5. Take–off / runout ducts shall match the neck size of the grill / register / diffuser served, unless otherwise noted.
6. MC shall submit a complete and certified copy of the final air balance report to the mechanical engineer for approval. The report shall be submitted a minimum of one week prior to the final mechanical inspection.
7. MC to transition ductwork to the full size of the HVAC equipment inlet and outlets, served by the ductwork. Not all transitions are shown on the plans. (Typical.)
8. MC to field verify all ductwork routing, planned elevations, sizes and clearances prior to ordering or fabricating ductwork and fittings. Notify mechanical engineer of any conflicts or discrepancies, that cannot be resolved by the MC, and await direction.
9. MC shall visit the site and confirm all layout's and clearances prior to installing, ordering or fabricating any equipment, materials or parts. Immediately notify mechanical engineer of any conflicts and await resolution. If the mechanical contractor fails to notify the mechanical engineer of any conflicts and await resolution, the mechanical contractor shall be obligated to make any required changes, as directed by the mechanical engineer, without additional charge to the owner or engineer.
10. Mechanical contractor, controls contractor, and air balancing contractor shall coordinate all mechanical commissioning and start–up work. In the event mechanical engineer is not satisfied with the operation or performance of the HVAC systems, that are the scope of this project, mechanical contractor, controls contractor and air balancing contractor shall coordinate, cooperate and work together to satisfy mechanical engineer's concerns with the HVAC systems without any additional charges. This cooperating arrangement shall last for a minimum period of one year after owner's final acceptance of the work.
11. All user operable thermostats, temperature selectors, and temperature controls are to be mounted a maximum of 48" AFF, unless otherwise noted. Coordinate exact thermostat locations with owner.
12. HVAC unit thermostat settings are to be in accordance with HVAC UNIT THERMOSTAT SETTINGS table on Sheet M–3, unless otherwise noted.
13. Patch and seal all ductwork openings that are not being used / reused.
14. All interior exposed round make–up air ductwork, supply ductwork, and return ductwork, on this sheet, is spiral ductwork with spiral fittings.
15. All new rectangular make–up air ductwork (supply and intake) is to be externally insulated (see Sheet M–0.1). Make–up ductwork within the building envelope shall be insulated to R–6 minimum as installed. Make–up ductwork outside the building envelope shall be insulated to R–12 minimum as installed. (Typical)

TESTING, ADJUSTING, AND BALANCING SCOPE:

Balancing contractor shall test, adjust and balance the mechanical systems, serving the space under construction, and provide a full balancing report. Testing, adjusting and balancing shall include all air and hydronic systems. See Testing and Balancing on Sheet M–0.1 for general requirements.

SHEET DETAIL NOTES: (x)

1. Route double–wall reduced clearance factory built grease duct from hood riser to exhaust fan on roof. Field verify layout prior to fabrication / ordering. Duct to extend a minimum of 18" through the roof. Provide cleanout / access doors for portions of the grease duct that are inaccessible from the intake or discharge of the grease duct, at each change of direction, and at each floor level of the building. Grease duct to be 14" nominal (internal) diameter. Grease duct to be Captive–Aire Systerms, Inc model DW–2R.
2. Grease exhaust fan (EF1) on roof. Coordinate mounting location with existing structure and structural drawings. Mount on fan manufacturer's factory–built curb. Termination and clearances shall be in accordance with IMC Section 506.3.13.1 through 506.3.13.3. Fan is to discharge a minimum of 40" vertically above the roof surface, at the fan. Fan is to drain to a factory supplied grease box. Fan to duct connection to incorporate a high temperature gasket. Field verify exact fan location.
3. Maintain 10' minimum horizontal clearance from flue terminals, exhaust discharge, and plumbing vents to air intakes. (Typical)
4. Locate mechanical equipment a minimum of 10 feet horizontally from edges of building. (Typical)
5. Remove existing kitchen hood exhaust fan. Cap curb with waterproof and insulated (R–12 minimum) galvanized sheet metal cap. Seal curb and cap water tight.
6. Remove exhaust duct gooseneck on roof. Cap existing restroom exhaust duct on roof. Remove portion of existing restroom exhaust duct located below roof.
7. 20"x20" make–up air intake duct intake. Terminate duct in a screened gooseneck a minimum of 24" above the finished roof. Screen shall be galvanized steel hardware cloth constructed with 1" square openings. Orient intake opening on gooseneck to downslope side of roof. Maintain a minimum of 10 feet horizontal clearance between intake opening and all flue terminals, exhaust discharge, plumbing vents and other contaminant sources. Furnish roof jack, flashing, and storm collar for duct penetration through roof.

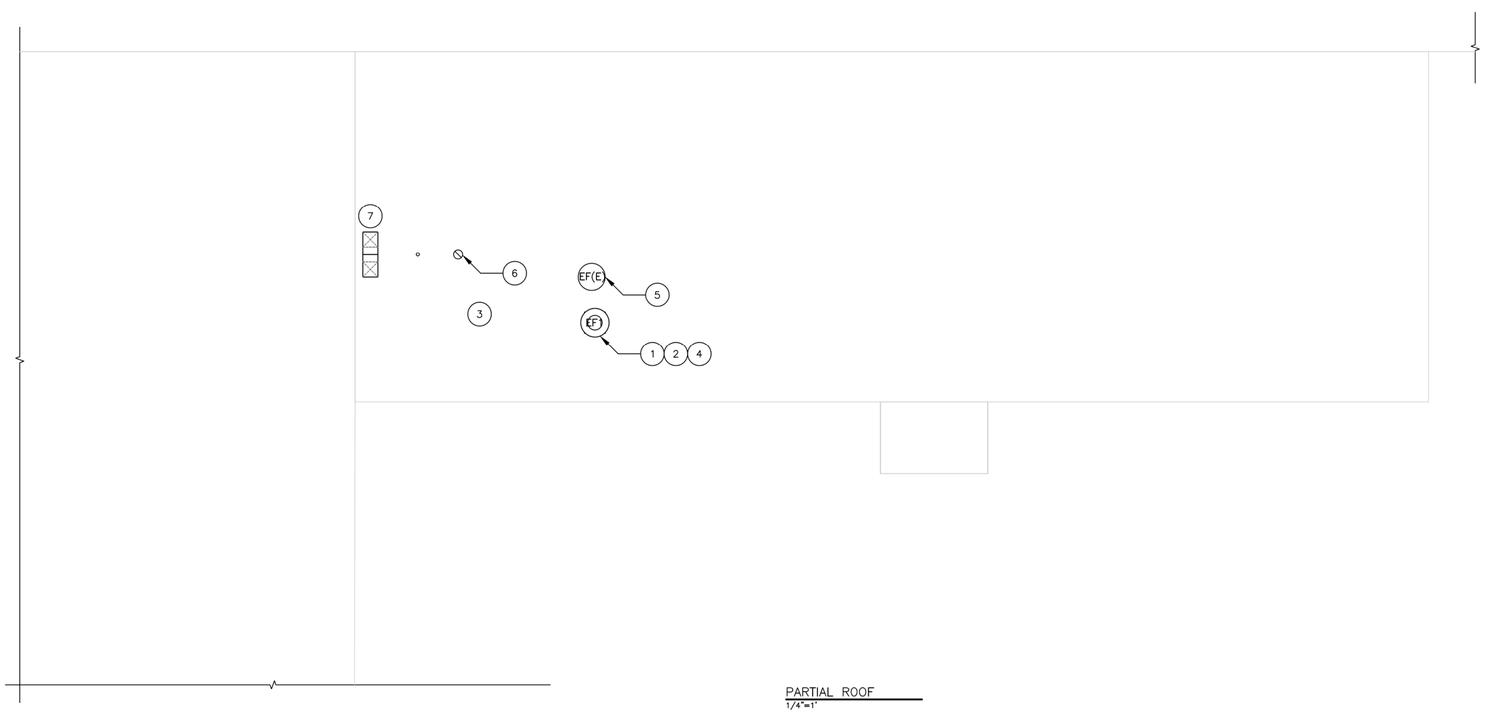

PARTIAL ROOF
1/4"=1'

SHEET LEGEND

OR —— NEW WORK

OR —— EXISTING TO REMAIN

CAIRN DESIGN LLC
leading high performance building solutions

1805 Sheely Drive
Fort Collins, CO 80526

voice: (970)-286-7968

cairndesignllc.com

COLORADO LICENSED
BOBBY SHANE FRY
51817
12/16/2022
PROFESSIONAL ENGINEER

FRY ENGINEERING

FRY ENGINEERING, INC.
970-658-3665
SHANE@FRYENG.COM
WWW.FRYENG.COM
2702 BIANCO DR.
FORT COLLINS, CO 80521

The mechanical drawings and designs herein are instruments of professional service and are intended for one-time use in the construction of this project. They are and shall remain the sole property of Fry Engineering, Inc. They may not be reproduced or used for any other purpose without express written permission from Fry Engineering, Inc.
Copyright 2022, Fry Engineering, Inc.

PROJECT:

LOGAN COUNTY
COMMUNITY CENTER
ADDITION

SHEET TITLE:

HVAC ROOF PLAN

ISSUE DATE:

BID/PERMIT
12/16/2022

REVISIONS:

-

PROJECT NO.:
2208

SHEET NO.

M-2

As instruments of service, these drawings and the design represented are the permanent property of Cairn Design, LLC. Reproduction or use of these drawings other than for the project intended, without written consent from the Designer, is prohibited. Unauthorized use will be subject to legal action.

MECHANICAL AIR TERMINAL DEVICES SCHEDULE							
TAG	SIZE	DESCRIPTION	CONSTRUCTION	BASIS OF DESIGN		DETAILS	NOTES
			FINISH	MANUFACTURER	MODEL OR SERIES		
CD1	24"X24"	THREE CONE T–BAR DIFFUSER	SOFT WHITE	TITUS	TMS	SUPPLY DIFFUSER, STEEL CONSTRUCTION, SOFT WHITE FINISH, T–BAR CEILING MOUNTED	1,2,4
SD2	PER PLANS	ALUMINUM AIRFOIL BLADE DIFFUSER – DOUBLE DEFLECTION	SOFT WHITE	SHOEMAKER	904	SUPPLY DIFFUSER, SOFT WHITE FINISH, WALL OR DUCT MOUNTED, ALUMINUM CONSTRUCTION	1,2,3,4

NOTES FOR AIR TERMINAL DEVICES.
1. SIZES SHOWN IN TABLE ABOVE ARE REGISTER SIZES. SEE PLANS FOR DUCT TAKE–OFF / DUCT CONNECTION SIZES. DIFFUSER NECK SIZE SHALL BE AS LISTED ON HVAC PLAN(S).
2. SEE ARCHITECTURAL REFLECTED CEILING PLAN FOR EXACT REGISTER, GRILLE AND DIFFUSER LOCATIONS.
3. OR APPROVED EQUAL MANUFACTURER AND MODEL.
4. FURNISH WITH TRANSITION OR RECTANGULAR TO ROUND REGISTER BOX AS NEEDED. NECK SIZE PER PLANS.

HVAC UNIT THERMOSTAT SETTINGS (RTU1 & RTU2)		
MODE	OCCUPIED (°F)	UNOCCUPIED (°F)
HEATING	70	55
COOLING	75	85

NOTES FOR THERMOSTAT SETTINGS:
1. MC TO SET THERMOSTATS TO MAINTAIN INDICATED TEMPERATURES DURING THE CORRESPONDING OCCUPANCY MODES.
2. SET MINIMUM HEATING / COOLING DEADBAND TO 5°F.

EXHAUST & INTAKE AIR BALANCE SCHEDULE (NEW WORK ONLY)								
UNIT	TAG	LOCATION	SUPPLY (CFM)	RETURN (CFM)	O.A. (CFM)	EXHAUST (CFM)	NET (CFM)	NOTES
HOOD #1	EF1	KITCHEN	–	–	–	–2292	–2292	1,2
SUB–TOTAL							–2292	
MAKE–UP	SF1	PER PLANS	–	–	2600	–	2600	1,2
SUB–TOTAL							2600	
TOTAL			–	–	2600	–2292	308	

AIR BALANCING NOTES:
1. HOOD #1 (INCLUDING EF1 AND SF1) IS EQUIPPED WITH DEMAND CONTROL VENTILATION. EXHAUST AND OUTSIDE AIR RATES VARY. BALANCING CONTRACTOR TO BALANCE FOR MINIMUM AND MAXIMUM STATES. REPORT ACTUAL MINIMUM AND MAXIMUM FLOW RATES ON BALANCE REPORT. MAXIMUM AIRFLOW SHOWN. MINIMUM AIRFLOW SHALL BE 80% OF MAXIMUM AIRFLOW.
2. SEE REMAINDER OF PLANS AND SPECIFICATIONS FOR REQUIRED AIRFLOW AT INDIVIDUAL AIR TERMINALS (I.E. GRILLS, REGISTERS, DIFFUSERS, EXHAUST HOODS, ETC.).

VENTILATION REQUIREMENTS																	
SPACE	AREA (FT^2) (Az)	OCCUPANT DENSITY (#/1000FT^2)	PEOPLE (Pz)	CFM/PERSON (Rp)	CFM/FT^2 (Ra)	EXHAUST CFM	REQUIRED O.A. (CFM) (Vbz)	EFFECTIVENESS (Ez)	ZONE OUTDOOR AIRFLOW (CFM) (Voz)	PRIMARY AIRFLOW (CFM) (Vpz)	PRIMARY OA FRACTION (Zp)	SYSTEM VENTILATION EFFICIENCY (Ev)	EXPECTED OCCUPANT DENSITY (Ps)	OCCUPANT DIVERSITY (D)	UNCORRECTED OA (CFM) (Vou)	SYSTEM OA RATE (CFM) (Vot)	NOTES
NON–DINING																	
KITCHEN	934	20	18.68	15	–	–	280	0.8	351	–	–	–	–	–	–	351	KITCHEN VENTILATION AND EXHAUST SERVED BY SF1 & EF1

VENTILATION REQUIREMENTS NOTES:
1. VENTILATION CALCULATIONS ARE BASED ON 2006 IMC (CURRENTLY ADOPTED MECHANICAL CODE – LOGAN COUNTY, CO)

CAIRN DESIGN LLC
leading high performance building solutions
1805 Sheely Drive
Fort Collins, CO 80526
voice: (970)-286-7968
cairndesignllc.com

COLORADO LICENSED
BOBBY SHANE FRY
51817
12/16/2022
PROFESSIONAL ENGINEER

FRY ENGINEERING, INC.
970-658-3665
SHANE@FRYENG.COM
WWW.FRYENG.COM
2702 BIANCO DR.
FORT COLLINS, CO 80521

The mechanical drawings and designs herein are instruments of professional service and are intended for one-time use in the construction of this project. They are and shall remain the sole property of Fry Engineering, Inc. They may not be reproduced or used for any other purpose without express written permission from Fry Engineering, Inc.
Copyright 2022, Fry Engineering, Inc.

PROJECT:

LOGAN COUNTY
COMMUNITY CENTER
ADDITION

SHEET TITLE:

HVAC SCHEDULES & DETAILS

ISSUE DATE:

BID/PERMIT
12/16/2022

REVISIONS:

-

PROJECT NO.:
2208

SHEET NO.

M-3

As instruments of service, these drawings and the design represented are the permanent property of Cairn Design, LLC. Reproduction or use of these drawings other than for the project intended, without written consent from the Designer, is prohibited. Unauthorized use will be subject to legal action.

HOOD INFORMATION

HOOD NO	TAG	MODEL	MANUFACTURER	LENGTH	MAX COOKING TEMP	TYPE	APPLIANCE DUTY	DESIGN CFM/FT	TOTAL EXH CFM	MIN CFM	EXHAUST PLENUM RISER(S) WIDTH	LENG	HEIGHT	DIA	CFM	VEL	SP	TOTAL SUPPLY CFM	HOOD CONSTRUCTION	HOOD CONFIG END TO END	ROW
1	Hood #1	5424 ND-2-PSP-F	CAPTIVEAIRE	8' 4"	600 DEG	I	HEAVY	275	2292	1834			4"	14"	2292	2144	-1.130"	1719	430 SS WHERE EXPOSED	ALONE	ALONE

Exhaust Fan Information Notes:
1. Hood #1 manufacturer shall be Captive-Aire Systems, Inc. or approved equal make and model.

HOOD INFORMATION

HOOD NO	TAG	FILTER(S) TYPE	QTY	HEIGHT	LENGTH	EFFICIENCY @ 7 MICRONS	LIGHT(S) QTY	TYPE	WIRE GUARD	AVERAGE FOOT CANDLES @ 36" AFF	UTILITY CABINET(S) LOCATION	SIZE	FIRE SYSTEM TYPE	SIZE	ELECTRICAL MODEL #	SWITCHES QUANTITY	FIRE SYSTEM PIPING	HOOD HANGING WEIGHT
1	Hood #1	CAPTRATE SOLO FILTER	6	20"	16"	85% SEE FILTER SPEC	6	SCREW IN HALOGEN	NO	57	RIGHT	12"x54"x24"	ANSUL R-102	3.0	DCV-1111	1 LIGHT 1 FAN	YES	952 LBS

HOOD OPTIONS

HOOD NO	TAG	OPTION
1	Hood #1	FIELD WRAPPER 18.00" HIGH FRONT, LEFT, RIGHT.
		BACKSPLASH 122.00" HIGH X 148.00" LONG 430 SS VERTICAL.
		INSULATION FOR TOP OF HOOD.
		INSULATION FOR BACK OF HOOD.
		RISER SENSOR INSTALL 2IN DBL.
		WALL END CAP 122.00" HIGH X 5.13" WALL WIDTH, 2.00" LEGS 430 SS.
		WALL END CAP 122.00" HIGH X 5.13" WALL WIDTH, 2.00" LEGS 430 SS.
		RIGHT WIDE VERTICAL END PANEL 42" TOP WIDTH, 36" BOTTOM WIDTH, 80" HIGH INSULATED 430 SS.
		LEFT WIDE VERTICAL END PANEL 42" TOP WIDTH, 36" BOTTOM WIDTH, 80" HIGH INSULATED 430 SS.

PERFORATED SUPPLY PLENUM(S)

HOOD NO	TAG	POS	LENGTH	WIDTH	HEIGHT	TYPE	RISER(S) WIDTH	LENG	DIA	CFM	SP
1	Hood #1	Front	112"	16"	6"	MUA	10"	28"		573	0.153"
						MUA	10"	28"		573	0.153"
						MUA	10"	28"		573	0.153"

FIRE SYSTEM INFORMATION

FIRE SYSTEM NO	TAG	TYPE	SIZE	FLOW POINTS	INSTALLATION SYSTEM	LOCATION ON HOOD
1		ANSUL R102	3.0	10	FIRE CABINET RIGHT	RIGHT, HOOD 1

GAS VALVE(S)

FIRE SYSTEM NO	TAG	TYPE	SIZE	SUPPLIED BY
1		SC ELECTRICAL	1.000	CAPTIVEAIRE SYSTEMS

SPECIFICATION: CAPTRATE• GREASE-STOP• SOLO FILTER

THE CAPTRATE GREASE-STOP SOLO FILTER IS A SINGLE-STAGE FILTER FEATURING A UNIQUE S-BAFFLE DESIGN IN CONJUNCTION WITH A SLOTTED REAR BAFFLE DESIGN, TO DELIVER EXCEPTIONAL FILTRATION EFFICIENCY.

FILTER IS STAINLESS STEEL CONSTRUCTION, AND SIZED TO FIT INTO STANDARD 2-INCH DEEP HOOD CHANNEL(S).

UNITS SHALL INCLUDE STAINLESS STEEL HANDLES AND A FASTENING DEVICE TO SECURE THE TWO COMPONENTS WHEN ASSEMBLED.

GREASE EXTRACTION EFFICIENCY PERFORMANCE SHALL REMOVE AT LEAST 75% OF GREASE PARTICLES FIVE MICRONS IN SIZE, AND 85% GREASE PARTICLES SEVEN MICRONS IN SIZE AND LARGER, WITH A CORRESPONDING PRESSURE DROP NOT TO EXCEED 1.0 INCHES OF WATER GAUGE.

THE CAPTRATE GREASE-STOP SOLO WAS TESTED TO ASTM STANDARD ASTM F2519-05. MANUFACTURER APPROVED FOR USE IN SOLID FUEL APPLICATIONS AS A SPARK ARRESTER.

EFFICIENCY VS. PARTICLE DIAMETER

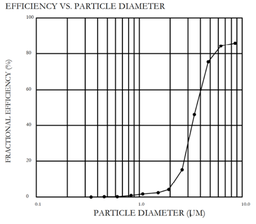

PRESSURE DROP VS. FLOW RATE

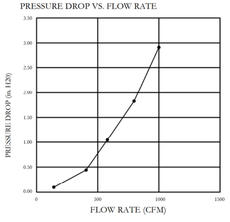

CAPTRATE FILTERS ARE BUILT IN COMPLIANCE WITH:
NFPA #96.
NSF STANDARD #2.
UL STANDARD #1046.
INT. MECH. CODE (IMC).
ULC-S649.

HOOD / FAN(S) SEQUENCE OF OPERATION

NORMAL MODE: EXHAUST FAN 1 (EF1) & MAKE-UP AIR FAN (SF1) ARE ENERGIZED CONCURRENTLY BY FAN SWITCH OR TEMPERATURE SENSOR(S) IN HOOD(S) (IMC 507.1.1).

FIRE MODE: EF1 TO ENERGIZE. MAKE-UP AIR FAN (SF1), LIGHTS IN HOOD AND POWER UNDER HOOD TO SHUT DOWN. POWER & FUEL TO APPLIANCES UNDER HOOD TO SHUT OFF.

ELECTRICAL NOTE:
JOBSITE ELECTRICIAN TO PROVIDE ALL ADDITIONAL WIRING AS NECESSARY TO FACILITATE THE ABOVE SEQUENCES OR OPERATION. SOME WIRING MAY NOT BE SHOWN.

HOOD EXHAUST AIRFLOW CALCS:

HOOD #1: 140 CFM / LNFT. MINIMUM (PER E.T.L. LISTING)
140 CFM X 8.33 FEET = 1166 CFM REQUIRED (MINIMUM)
ACTUAL DESIGN AIRFLOW = 2292 CFM

HOOD LISTING:
CAPTIVE-AIRE SYSTEMS INC.'S MODEL 5424-ND-2-PSP-F HOOD IS A TYPE 1 HOOD. IT IS ETL LISTED TO U.L. 710 AND SHALL BEAR AN ETL LISTING LABEL. THIS MODEL IS LISTED FOR REDUCED AIRFLOW. THIS MODEL IS LISTED FOR ZERO CLEARANCE TO COMBUSTIBLES (RIGHT, FRONT, BACK AND TOP SIDES), DISTANCE FROM THE COOKING SURFACE AND OVERHANG. (SEE ETL LABEL ON HOOD.) THIS HOOD IS ETL SANITATION LISTED.

SYSTEM DESIGN VERIFICATION (SDV)

MECHANICAL CONTRACTOR SHALL FURNISH CAPTIVE-AIRE SYSTEMS' (CAS) DESIGN VERIFICATION SERVICES FOR ALL NEW HOOD SYSTEM EQUIPMENT.

CAS SERVICE WILL PERFORM A SYSTEM DESIGN VERIFICATION (SDV) ONCE ALL EQUIPMENT HAS HAD A COMPLETE START UP PER THE OPERATION AND INSTALLATION MANUAL. TYPICALLY, THE SDV WILL BE PERFORMED AFTER ALL INSPECTIONS ARE COMPLETE.

ANY FIELD RELATED DISCREPANCIES THAT ARE DISCOVERED DURING THE SDV WILL BE BROUGHT TO THE ATTENTION OF THE GENERAL CONTRACTOR AND CORRESPONDING TRADES ON SITE. THESE ISSUES WILL BE DOCUMENTED AND FORWARDED TO THE APPROPRIATE SALES OFFICE. IF CAS SERVICE HAS TO RESOLVE A DISCREPANCY THAT IS A FIELD ISSUE, THE GENERAL CONTRACTOR WILL BE NOTIFIED AND BILLED FOR THE WORK. SHOULD A RETURN TRIP BE REQUIRED DUE TO ANY FIELD RELATED DISCREPANCY, THAT CANNOT BE RESOLVED DURING THE SDV, THERE WILL BE ADDITIONAL TRIP CHARGES.

DURING THE SDV, CAS SERVICE WILL ADDRESS ANY DISCREPANCY THAT IS THE FAULT OF THE MANUFACTURER. SHOULD A RETURN TRIP BE REQUIRED, THE GENERAL CONTRACTOR AND APPROPRIATE SALES OFFICE WILL BE NOTIFIED. THERE WILL BE NO ADDITIONAL CHARGES FOR MANUFACTURER DISCREPANCIES.

CAIRN DESIGN LLC
leading high performance building solutions
1805 Sheely Drive
Fort Collins, CO 80526
voice: (970)-286-7968
cairndesignllc.com

COLORADO LICENSED
BOBBY SHANE FRY
5817
12/16/2022
PROFESSIONAL ENGINEER

FRY ENGINEERING, INC.
970-658-3665
SHANE@FRYENG.COM
WWW.FRYENG.COM
2702 BIANCO DR.
FORT COLLINS, CO 80521

The mechanical drawings and designs herein are instruments of professional service and are intended for one-time use in the construction of this project. They are and shall remain the sole property of Fry Engineering, Inc. They may not be reproduced or used for any other purpose without express written permission from Fry Engineering, Inc.
Copyright 2022, Fry Engineering, Inc.

PROJECT:
LOGAN COUNTY COMMUNITY CENTER ADDITION

SHEET TITLE:
HOOD SCHEDULES

ISSUE DATE:
BID/PERMIT
12/16/2022

REVISIONS:
-

PROJECT NO.:
2208

SHEET NO.
M-4

As instruments of service, these drawings and the design represented are the permanent property of Cairn Design, LLC. Reproduction or use of these drawings other than for the project intended, without written consent from the Designer, is prohibited. Unauthorized use will be subject to legal action.

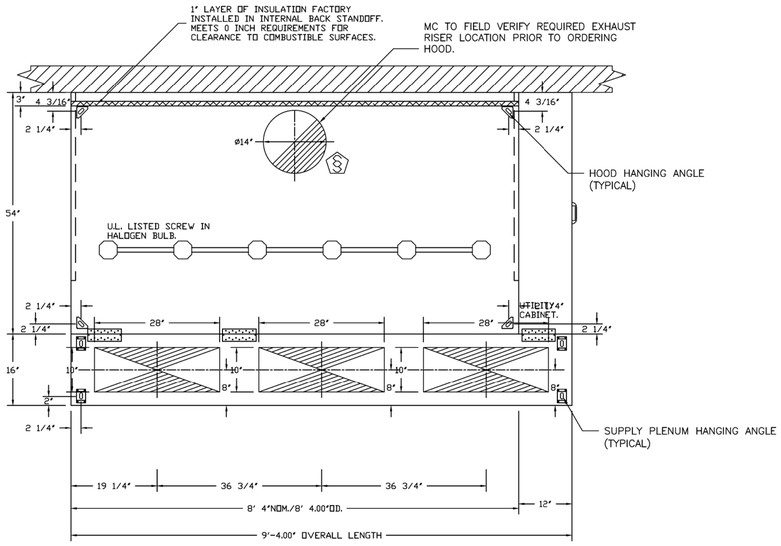

PLAN VIEW – HOOD #1 (Hood #1)
8' 4.00" LONG 5424ND-2-PSP-F

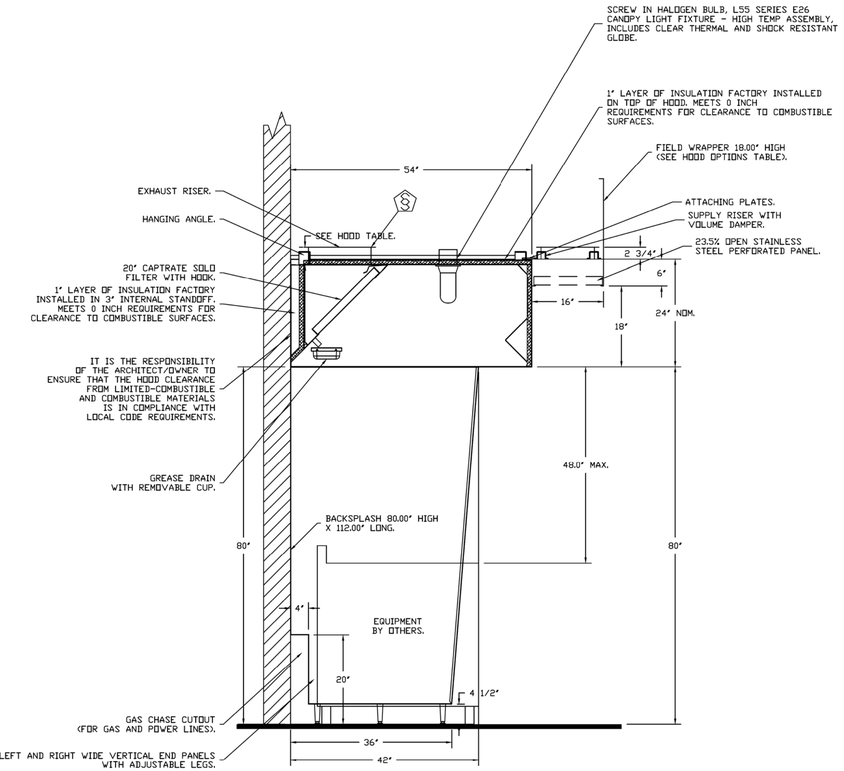

SECTION VIEW – MODEL 5424ND-2-PSP-F
HOOD – #1 (Hood #1)

HANGING ANGLE
(HARDWARE BY INSTALLER)

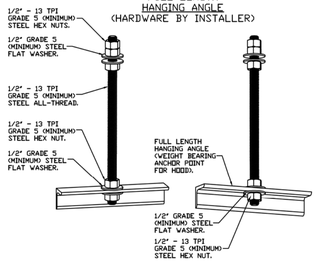

ASSEMBLY INSTRUCTIONS

HANGING ANGLE MUST BE SUPPORTED WITH 1/2" - 13 TPI GRADE 5 (MINIMUM) ALL-THREAD. SANDWICH HANGING ANGLES AND CEILING ANCHOR POINTS WITH 1/2" GRADE 5 (MINIMUM) STEEL FLAT WASHERS AND 1/2" - 13 TPI GRADE 5 (MINIMUM) HEX NUTS AS SHOWN. MUST USE DOUBLED HEX NUT CONFIGURATION ABOVE CEILING ANCHORS. SINGLE HEX NUT BENEATH HANGING ANGLE IS ACCEPTABLE FOR FULL LENGTH HANGING ANGLES. MAINTAIN 1/4" OF EXPOSED THREADS BENEATH BOTTOM HEX NUT. TORQUE ALL HEX NUTS TO 57 FT-LBS.

HANGING ANGLE
(HARDWARE BY INSTALLER)

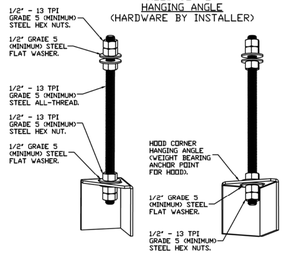

ASSEMBLY INSTRUCTIONS

HANGING ANGLE MUST BE SUPPORTED WITH 1/2" - 13 TPI GRADE 5 (MINIMUM) ALL-THREAD. SANDWICH HANGING ANGLES AND CEILING ANCHOR POINTS WITH 1/2" GRADE 5 (MINIMUM) STEEL FLAT WASHERS AND 1/2" - 13 TPI GRADE 5 (MINIMUM) HEX NUTS AS SHOWN. MUST USE DOUBLED HEX NUT CONFIGURATION BENEATH HOOD HANGING ANGLES AND ABOVE CEILING ANCHORS. MAINTAIN 1/4" OF EXPOSED THREADS BENEATH BOTTOM HEX NUT. TORQUE ALL HEX NUTS TO 57 FT-LBS.

SUPPLY PLENUM
HANGING ANGLE
(HARDWARE BY INSTALLER)

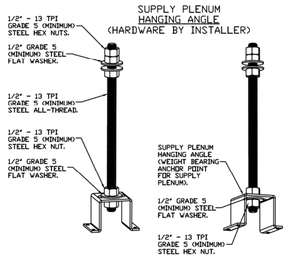

ASSEMBLY INSTRUCTIONS

HANGING ANGLE MUST BE SUPPORTED WITH 1/2" - 13 TPI GRADE 5 (MINIMUM) ALL-THREAD. SANDWICH HANGING ANGLES AND CEILING ANCHOR POINTS WITH 1/2" GRADE 5 (MINIMUM) STEEL FLAT WASHERS AND 1/2" - 13 TPI GRADE 5 (MINIMUM) HEX NUTS AS SHOWN. MUST USE DOUBLED HEX NUT CONFIGURATION ABOVE CEILING ANCHORS. SINGLE HEX NUT BENEATH HANGING ANGLE IS ACCEPTABLE FOR PSP HANGING ANGLES. MAINTAIN 1/4" OF EXPOSED THREADS BENEATH BOTTOM HEX NUT. TORQUE ALL HEX NUTS TO 57 FT-LBS.

CAIRN DESIGN LLC
leading high performance building solutions

1805 Sheely Drive
Fort Collins, CO 80526

voice: (970)-286-7968

cairndesignllc.com

COLORADO LICENSED
BOBBY SHANE FRY
51817
12/16/2022
PROFESSIONAL ENGINEER

FRY ENGINEERING

FRY ENGINEERING, INC.
970-658-3665
SHANE@FRYENG.COM
WWW.FRYENG.COM
2702 BIANCO DR.
FORT COLLINS, CO 80521

The mechanical drawings and designs herein are instruments of professional service and are intended for one-time use in the construction of this project. They are and shall remain the sole property of Fry Engineering, Inc. They may not be reproduced or used for any other purpose without express written permission from Fry Engineering, Inc.
Copyright 2022, Fry Engineering, Inc.

PROJECT:

LOGAN COUNTY
COMMUNITY CENTER
ADDITION

SHEET TITLE:

HOOD DETAILS

ISSUE DATE:

BID/PERMIT
12/16/2022

REVISIONS:

-

PROJECT NO.:
2208

SHEET NO.

M-5

As instruments of service, these drawings and the design represented are the permanent property of Cairn Design, LLC. Reproduction or use of these drawings other than for the project intended, without written consent from the Designer, is prohibited. Unauthorized use will be subject to legal action.

EXHAUST FAN INFORMATION

FAN UNIT NO	TAG	QTY	FAN UNIT MODEL #	MANUFACTURER	CFM	ESP	RPM	MOTOR ENCL	HP	BHP	PHASE	VOLT	FLA	DISCHARGE VELOCITY	WEIGHT (LBS)	SONES
1	EF1	1	DU180HFA	CAPTIVEAIRE	2292	1.500	1271	ODP,PREMIUM	2.000	1.2060	3	208	6.1	529 FPM	169	18.3

Exhaust Fan Information Notes:
1. EF1 manufacturer shall be Captive-Aire Systems, Inc. or approved equal make and model.

MUA FAN INFORMATION

FAN UNIT NO	TAG	QTY	FAN UNIT MODEL #	BLOWER	HOUSING	MIN CFM	DESIGN CFM	ESP	RPM	MOTOR ENCL	HP	BHP	PHASE	VOLT	FLA	MCA	MOCP	EVAP FLOW RATE (Gal/Hr)	EVAP COOLER ENTERING DB TEMP	EVAP COOLER ENTERING WB TEMP	EVAP COOLER LEAVING DB TEMP	EVAP COOLER LEAVING WB TEMP	WEIGHT (LBS)	SONES
2	SF1	1	A2-D.500-20D	20MF-2-MOD	A2-D.500	2000	2600	0.600	1277	ODP,PREMIUM	1.500	0.9700	3	208	6.6	8.3A	15A	3.74	93.0°F	63.0°F	72.0°F	63.0°F	1031	10.6

MUA Fan Information Notes:
1. SF1 manufacturer shall be Captive-Aire Systems, Inc. or approved equal make and model.

GAS FIRED MAKE-UP AIR UNIT(S)

FAN UNIT NO	TAG	INPUT BTUs	OUTPUT BTUs	TEMP RISE	REQUIRED INPUT GAS PRESSURE	GAS TYPE	BURNER EFFICIENCY(%)
2	SF1	207205	190629	80°F	7 IN. W.C. - 14 IN. W.C.	NATURAL	92

FAN OPTIONS

FAN UNIT NO	TAG	QTY	DESCRIPTION
1	EF1	1	GREASE BOX
		1	FAN BASE CERAMIC SEAL - SHIP LOOSE - FOR GREASE DUCTS
		1	HINGE KIT - SHIPS LOOSE FOR CURB SUPPLIED BY OTHERS
		1	2 YEAR PARTS WARRANTY
2	SF1	1	INLET PRESSURE GAUGE, 0-35"
		1	MANIFOLD PRESSURE GAUGE, -5 TO 15" WC
		1	SHIP LOOSE GAS STRAINER 1"
		1	MOTORIZED BACKDRAFT DAMPER FOR A2-D HOUSING - MEETS AMCA CLASS 1A RATING
		1	INSULATION OPTION FOR VBANK FILTER SECTION
		1	IBT/MUA EVAP INTERLOCK
		1	DUCT MOUNTED SMOKE DETECTOR - SHIPS LOOSE
		1	FREEZE PROTECTION DRAIN KIT FOR IBT/MUA WITH EVAPORATIVE COOLERS
		1	LOW FIRE START
		1	FREEZESTAT
		1	CLOGGED FILTER SWITCH - NOTIFICATION ON HMI
		1	SEPARATE 120V WIRING PACKAGE (REQUIRED AND USED ONLY FOR DCV OR PREWIRE WITH VFD) - THREE PHASE ONLY
		1	SIZE 2 DIRECT FIRED HEATER LOW CFM PROFILE PACKAGE - USED ON HEATERS UNDER 2500 CFM
		1	REMOTE WALL MOUNT HMI HEATER CONTROL PANEL, SHIP LOOSE IN HEATER
		1	2 YEAR PARTS WARRANTY

FAN ACCESSORIES

FAN UNIT NO	TAG	EXHAUST			SUPPLY			
		GREASE CUP	GRAVITY DAMPER	WALL MOUNT	SIDE DISCHARGE	GRAVITY DAMPER	MOTORIZED DAMPER	WALL MOUNT
1	EF1	YES						
2	SF1				YES		YES	

CURB ASSEMBLIES

NO	ON FAN	TAG	WEIGHT	ITEM	SIZE
1	# 1	EF1	41 LBS	CURB	26.500"W X 26.500"L X 20.000"H PITCHED (FIELD VERIFY PITCH), VENTED, HINGED.

FAN SOUND DATA

FAN UNIT NO	TAG	MOTOR	SOUND DATA			OCTAVE BAND SOUND DATA								
			LWA	SONES @ 5 FT	DBA @ 5 FT	DISTANCE (FT)	63 HZ	125 HZ	250 HZ	500 HZ	1 KHZ	2 KHZ	4 KHZ	8 KHZ
1	EF1	EXHAUST	81.4	18.283030879435 5	69.9	5	76.1	80.5	87.8	77.8	70.8	68.6	62.4	56.7
2	SF1	SUPPLY	73.5	10.5705208100098	62	5	69.9	77.5	72.4	71.2	67.6	65	62	58.5

CAIRN DESIGN LLC
leading high performance building solutions

1805 Sheely Drive
Fort Collins, CO 80526

voice: (970)-286-7968

cairndesignllc.com

COLORADO LICENSED
BOBBY SHANE FRY
51817
12/16/2022
PROFESSIONAL ENGINEER

FRY ENGINEERING, INC.
970-658-3665
SHANE@FRYENG.COM
WWW.FRYENG.COM
2702 BIANCO DR.
FORT COLLINS, CO 80521

The mechanical drawings and designs herein are instruments of professional service and are intended for one-time use in the construction of this project. They are and shall remain the sole property of Fry Engineering, Inc. They may not be reproduced or used for any other purpose without express written permission from Fry Engineering, Inc.
Copyright 2022, Fry Engineering, Inc.

PROJECT:

LOGAN COUNTY
COMMUNITY CENTER
ADDITION

SHEET TITLE:

HOOD FAN SCHEDULES

ISSUE DATE:

BID/PERMIT
12/16/2022

REVISIONS:

-

PROJECT NO.:
2208

SHEET NO.

M-6

As instruments of service, these drawings and the design represented are the permanent property of Cairn Design, LLC. Reproduction or use of these drawings other than for the project intended, without written consent from the Designer, is prohibited. Unauthorized use will be subject to legal action.

FAN #2 A2-D500-20D - HEATER (SF1)
1. DIRECT GAS FIRED HEATED MAKE UP AIR UNIT WITH 20' MIXED FLOW DIRECT DRIVE FAN.
2. EVAP COOLER (LPD) & V-BANK WITH 2" EZ FILTERS-INDOOR.
3. SIDE DISCHARGE - AIR FLOW RIGHT -> LEFT.
4. GAS PRESSURE GAUGE, 0-35", 2.5" DIAMETER, 1/4" THREAD SIZE.
5. GAS PRESSURE GAUGE, -5 TO +15 INCHES WC., 2.5" DIAMETER, 1/4" THREAD SIZE.
6. SHIP LOOSE GAS STRAINER. TO BE INSTALLED UPSTREAM OF UNIT CONNECTION. 1" CONNECTION.
7. MOTORIZED BACK DRAFT DAMPER 22.75" X 24" FOR SIZE 2 STANDARD & MODULAR HEATER UNITS W/EXTENDED SHAFT, STANDARD GALVANIZED CONSTRUCTION, 3/4" REAR FLANGE, LOW LEAKAGE, LF1205 ACTUATOR INCLUDED.
8. "INSULATION" FOR V-BANK INTAKE OPTION.
9. LAYER CONTROL FOR IBT EVAP.
10. DUCT MOUNTED SMOKE DETECTOR FOR COMMERCIAL DIRECT FIRED HEATER. COMPLETE WITH DETECTOR (D4120) AND SAMPLING TUBE (DST-1.5). SHIPS LOOSE.
11. FREEZE PROTECTION DRAIN CONTROL KIT FOR EVAPORATIVE COOLERS. INCLUDES 3-WAY WATER SOLENOID VALVE 8316G064 (SHIPPED LOOSE), PRESSURE SWITCH INSTALLED UPSTREAM OF 2WAY SOLENOID IN UNIT, BRASS TEE AND 2 NPT HALF INCH NIPPLES. FIELD WIRING REQUIRED BY OTHERS FOR 3-WAY VALVE. FOR BOTH CELDEK AND STANDARD V-BANK TYPE CONFIGURATIONS.
12. LOW FIRE START. ALLOWS THE BURNER CIRCUIT TO ENERGIZE WHEN THE MODULATION CONTROL IS IN A LOW FIRE POSITION.
13. FREEZESTAT FACTORY SET AT 35°F AND 10 MINUTES.
14. CLOGGED FILTER SWITCH WITH NOTIFICATION ON HMI.
15. SEPARATE 120VAC WIRING PACKAGE FOR MAKE-UP AIR UNITS. OPTION MUST BE SELECTED WHEN MOUNTING VFD IN PREWIRE PANEL OR WITH DCV PACKAGE. PROVIDES SEPARATE 120VAC INPUT TO SUPPLY FAN. THIS 120V SIGNAL MUST BE RUN BY ELECTRICIAN FROM DCV TO MUA SWITCH.
16. PROFILE PLATE CONFIGURATION FOR SIZE 2 DIRECT FIRED UNIT FOR LOW CFM APPLICATIONS.
17. HINGED DOUBLE WALL INSULATED DOOR ASSEMBLY (BURNER/BLOWER/EVAP SECTION).
18. 2 YEAR PARTS WARRANTY

*NOTE: SUPPLY DUCT MUST BE INSTALLED TO MEET SMACNA STANDARDS. A MINIMUM STRAIGHT DUCT LENGTH MUST BE MAINTAINED DOWNSTREAM OF UNIT DISCHARGE AS OUTLINED IN AMCA PUBLICATION 201. WHEN USING RECTANGULAR DUCTWORK, ELBOWS MUST BE RADIUS THROAT, RADIUS BACK WITH TURNING VANES. FLEXIBLE DUCTWORK AND SQUARE THROAT/SQUARE BACK ELBOWS SHOULD NOT BE USED. ANY TRANSITION AND/OR TURNS IN THE DUCTWORK WILL CAUSE SYSTEM EFFECT. SYSTEM EFFECT WILL DRASTICALLY INCREASE STATIC PRESSURE AND REDUCE AIRFLOW. DO NOT RELY ON UNIT TO SUPPORT DUCT IN ANY WAY. FAILURE TO PROPERLY SIZE DUCTWORK MAY CAUSE SYSTEM EFFECTS AND REDUCE PERFORMANCE OF THE EQUIPMENT.
SUGGESTED STRAIGHT DUCT SIZE IS 26" x 26".

SUPPLY SIDE HEATER INFORMATION:

WINTER TEMPERATURE = 0°F. TEMP. RISE = 80°F.
BTUs CALCULATED OFF ACTUAL AIR DENSITY.
OUTPUT BTUs AT ALTITUDE OF 0.0 FT. = 220156.
INPUT BTUs AT ALTITUDE OF 0.0 FT. = 239300.
OUTPUT BTUs AT ALTITUDE OF 3931 FT. = 190629.
INPUT BTUs AT ALTITUDE OF 3931 FT. = 207205.

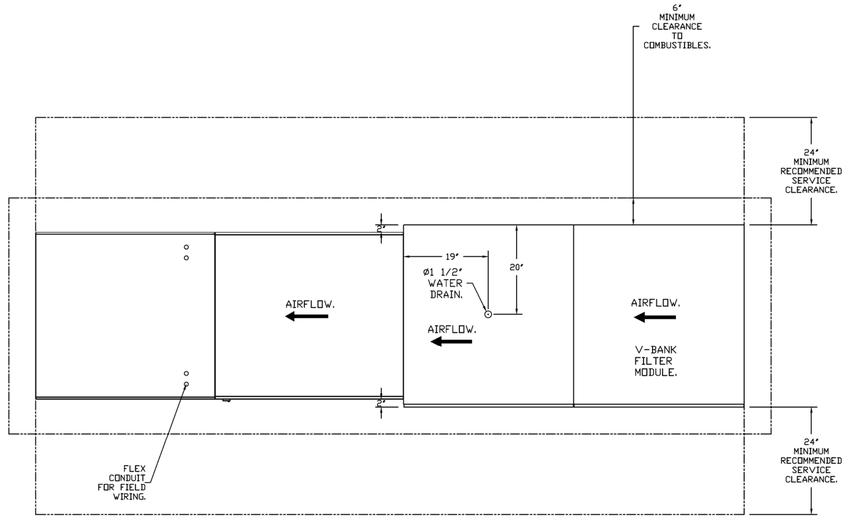

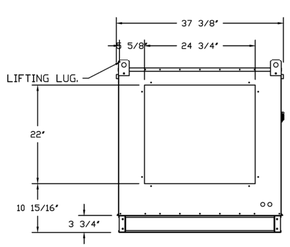

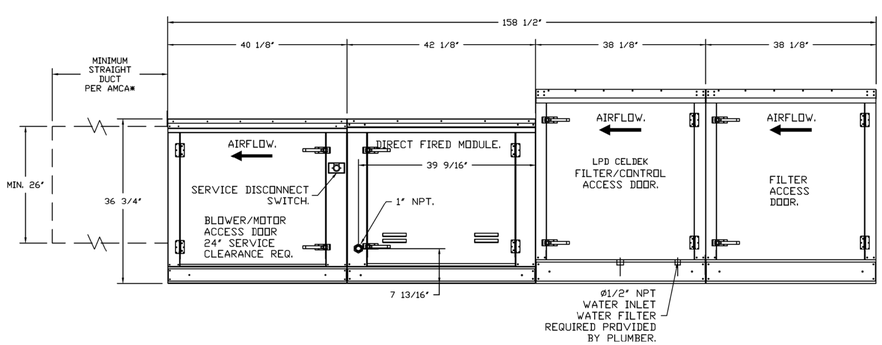

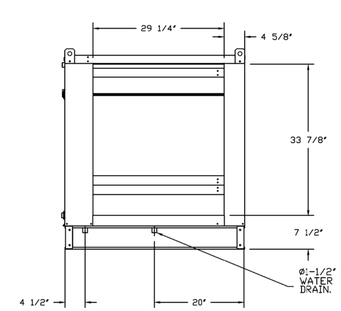

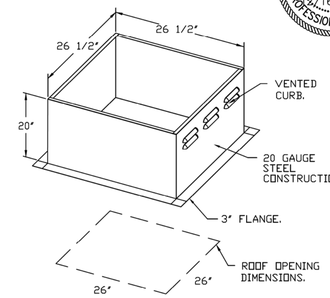

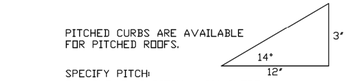

PITCHED CURBS ARE AVAILABLE FOR PITCHED ROOFS.

SPECIFY PITCH:
EXAMPLE: 7/12 PITCH = 30° SLOPE.

FAN #1 DU180H - EXHAUST FAN (EF1)

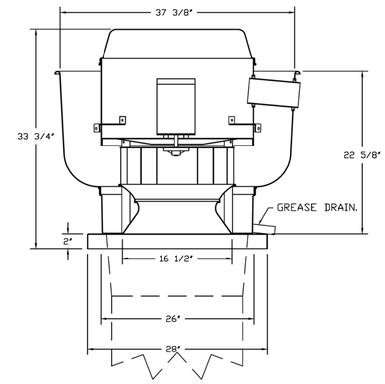

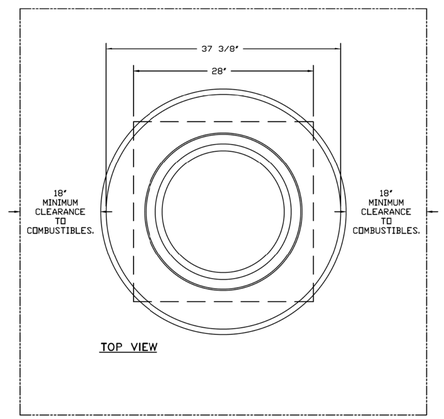

FEATURES:

- DIRECT DRIVE CONSTRUCTION (NO BELTS/PULLEYS).
- ROOF MOUNTED FANS.
- RESTAURANT MODEL.
- UL705 AND UL762 AND ULC-S645
- VARIABLE SPEED CONTROL.
- INTERNAL WIRING.
- THERMAL OVERLOAD PROTECTION (SINGLE PHASE).
- HIGH HEAT OPERATION 300°F (149°C).
- GREASE CLASSIFICATION TESTING.
- NEMA 3R SAFETY DISCONNECT SWITCH.

NORMAL TEMPERATURE TEST
EXHAUST FAN MUST OPERATE CONTINUOUSLY WHILE EXHAUSTING AIR AT 300°F (149°C) UNTIL ALL FAN PARTS HAVE REACHED THERMAL EQUILIBRIUM, AND WITHOUT ANY DETERIORATING EFFECTS TO THE FAN WHICH WOULD CAUSE UNSAFE OPERATION.

ABNORMAL FLARE-UP TEST
EXHAUST FAN MUST OPERATE CONTINUOUSLY WHILE EXHAUSTING BURNING GREASE VAPORS AT 600°F (316°C) FOR A PERIOD OF 15 MINUTES WITHOUT THE FAN BECOMING DAMAGED TO ANY EXTENT THAT COULD CAUSE AN UNSAFE CONDITION.

OPTIONS

- GREASE BOX.
- FAN BASE CERAMIC SEAL - SHIP LOOSE.
- FOR GREASE DUCTS.
- 2 YEAR PARTS WARRANTY.

COLORADO LICENSED
BOBBY SHANE FRY
5817
12/16/2022
PROFESSIONAL ENGINEER

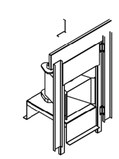

DIRECT FIRED (DF) PROFILE PLATE ASSEMBLY

DIRECT FIRED PROFILE PLATE SPECIFICATIONS:
DESCRIPTION:
DIRECT FIRED BURNERS SHALL HAVE PATENTED (US PATENT NO: US6629523B2), SELF-ADJUSTING PROFILE PLATES DESIGNED TO ENSURE PROPER AIR VELOCITY AND PRESSURE DROP ACROSS THE BURNER. PROFILE PLATES SHALL ALLOW BURNERS TO ACHIEVE CLEAN COMBUSTION BY LIMITING BY-PRODUCT LEVELS TO A MAXIMUM OF 5PPM OF CARBON MONOXIDE (CO), AND 0.5PPM OF NITROGEN DIOXIDE (NO2)(DIRECT FIRED UNITS SHALL BE CONFIGURED WITH THE BLOWER MOUNTED DOWNSTREAM OF THE BURNER. THIS ARRANGEMENT WILL ENSURE A CONSISTENT AIRFLOW, REGARDLESS OF INLET AIR TEMPERATURE.

APPLICATION:
SPRING-LOADED BURNER PROFILE PLATES ARE ENGINEERED TO AUTOMATICALLY REACT TO THE MOMENTUM OF A FRESH AIR STREAM, WITHOUT THE NEED FOR ANY MOTORS OR ACTUATORS TO MECHANICALLY ADJUST THEM. WITH THIS FEATURE, ALL DF UNITS ARE DESIGNED FOR DEMAND CONTROL VENTILATION (DCV) REQUIREMENTS.

CERTIFICATIONS:
ALL PROFILE PLATE ASSEMBLIES SHALL BE INCLUDED IN THE DF UNIT'S ETL LISTING AND COMPLY WITH COMBINED SAFETY STANDARDS ANSI Z83.4 AND CSA 3.7 (NON-RECIRCULATING DF HEATERS) AND ANSI Z83.18 (RECIRCULATING DF HEATERS).

GENERAL CONSTRUCTION:
-PROFILE PLATES SHALL BE FORMED FROM G90 GALVANIZED STEEL.
-PROFILE PLATES SHALL VARY IN SIZE PER UNIT.
-PROFILE PLATES SHALL BE MOUNTED ALONG THE SAME PLANE AS THE DISCHARGE OF THE BURNER.
-DESIGN SHALL INCORPORATE PROPERLY TORQUED, PERMANENTLY MOUNTED SPRING HINGES.
-SPRING HINGES SHALL BE MADE FROM PLATED STEEL.

CAIRN DESIGN LLC
leading high performance building solutions
1805 Sheely Drive
Fort Collins, CO 80526
voice: (970)-286-7968
cairndesignllc.com

FRY ENGINEERING
FRY ENGINEERING, INC.
970-658-3665
SHANE@FRYENG.COM
WWW.FRYENG.COM
2702 BIANCO DR.
FORT COLLINS, CO 80521

The mechanical drawings and designs herein are instruments of professional service and are intended for one-time use in the construction of this project. They are and shall remain the sole property of Fry Engineering, Inc. They may not be reproduced or used for any other purpose without express written permission from Fry Engineering, Inc.
Copyright 2022, Fry Engineering, Inc.

PROJECT:
LOGAN COUNTY COMMUNITY CENTER ADDITION

SHEET TITLE:
HOOD FAN DETAILS

ISSUE DATE:
BID/PERMIT
12/16/2022

REVISIONS:
-

PROJECT NO.:
2208

SHEET NO.
M-7

As instruments of service, these drawings and the design represented are the permanent property of Cairn Design, LLC. Reproduction or use of these drawings other than for the project intended, without written consent from the Designer, is prohibited. Unauthorized use will be subject to legal action.

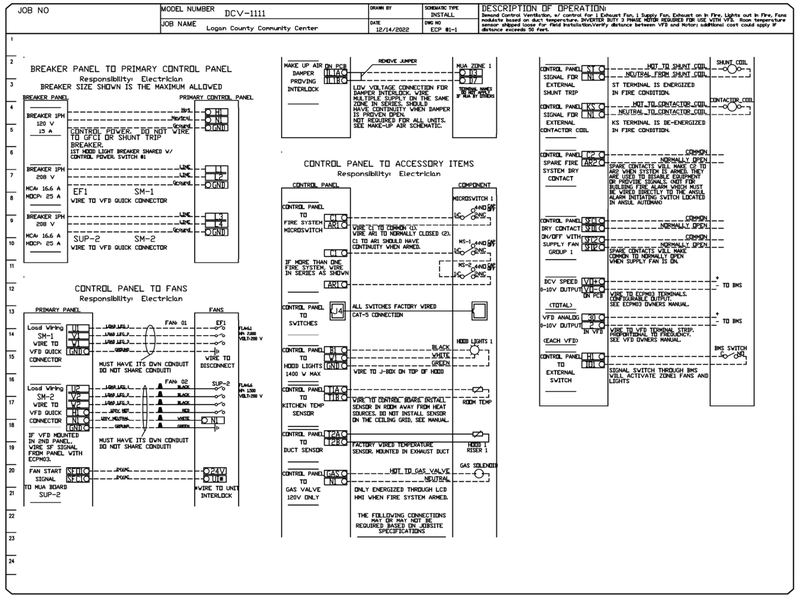

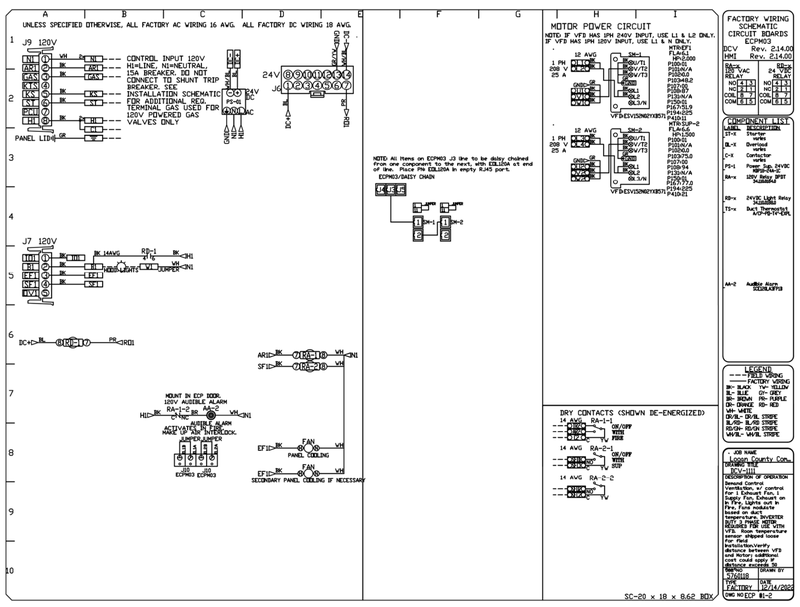

FACTORY BUILT DOUBLE WALL GREASE DUCT MODEL DW-2R SPECIFICATIONS:

FURNISH DOUBLE WALL, FACTORY BUILT GREASE DUCT FOR USE WITH TYPE I KITCHEN HOODS, WHICH CONFORMS TO THE REQUIREMENTS OF NFPA-96. PRODUCTS SHALL BE ETL LISTED TO UL-1978 AND UL-2221 FOR VENTING AIR AND GREASE VAPORS FROM COMMERCIAL COOKING OPERATION. TESTING HAS BEEN EXTENDED TO RECONGNIZE ASTM E2336 AND AC101 DUE TO SIMILAR TESTING CRITERIA. MODELS DW-2R, 3R AND 3Z ARE USED FOR GREASE DUCT APPLICATIONS. WHEN INSTALLED IN ACCORDANCE WITH THESE INSTRUCTIONS AND NFPA-96; STANDARD FOR VENTILATION CONTROL AND FIRE PROTECTION OF COMMERCIAL COOKING OPERATIONS. DOUBLE WALL GREASE DUCTS ARE LISTED FOR A CONTINUOUS INTERNAL TEMPERATURE OF 500 DEGREES F AND INTERMITTENT TEMPERATURES OF 2000 DEGREES F.

THE DUCT SECTIONS SHALL BE CONSTRUCTED OF AN INNER DUCT WALL AND AN OUTER WALL WITH INSULATION IN BETWEEN. THE INNER DUCT WALL SHALL BE CONSTRUCTED OF .036 INCH THINK, 430 TYPE STAINLESS STEEL AND BE AVAILABLE IN DIAMETERS 8" THROUGH 24". THE OUTER WALL SHALL BE CONSTRUCTED OF STAINLESS STEEL AT A MINIMUM OF .024 INCH THICKNESS. THE DUCT, BASED ON MODEL NUMBER, SHALL INCLUDE LAYERS OF SUPER WOOL 607 PLUS INSULATION BETWEEN THE INNER AND OUTER WALL. GREASE DUCT JOINTS SHALL BE HELD TOGETHER BY MEANS OF FORMED V CLAMPS AND SEALED WITH 3M FIRE BARRIER 2000+. THE DUCT WALL ASSEMBLY SHALL BE TESTED AT 3/4" OR ZERO INCH CLEARANCE, ACCORDING TO CLASSIFICATIONS.

CLASSIFICATIONS AND CLEARANCES

UL 2221: STANDARD FOR FIRE RESISTIVE GREASE DUCT ENCLOSURE ASSEMBLIES. CHAPTER 7 OF THIS STANDARD REFERENCES A TEST LABELED INTERNAL FIRE TEST. SECTION 7.1.1 REFERENCES TWO INSTALLATION CONDITIONS, CONDITION A AND CONDITION B. CONDITION A REPRESENTS ALL INSTALLATION CONDITION EXCEPT FOR INSTALLATION WITHIN NON-VENTILATED COMBUSTIBLE ENCLOSURES. CONDITION B REPRESENTS INSTALLATION WITHIN A NON-VENTILATED COMBUSTIBLE ENCLOSURE.

MODEL DW-2R IS CLASSIFIED UNDER UL2221 AS AN ALTERNATE TO 2-HR FIRE RESISTIVE SHAFT ENCLOSURES WITH A REDUCED CLEARANCE TO COMBUSTIBLES (SIZES 8" TO 16" DIAMETER). MODEL 2R IS LISTED IN ACCORDANCE WITH THE REQUIREMENTS FOR DUCT ENCLOSURE CONDITION B.

MODEL DW-2R: 3/4" CLEARANCE TO COMBUSTIBLES FROM THE SURFACE OF THE DUCT OUTER SHELL; ZERO" INCH CLEARANCE FROM COMBUSTIBLES FROM THE TIP OF THE OUTER V BAND.

DOUBLE WALL GREASE DUCT SHALL BE INSTALLED IN ACCORDANCE WITH THE MANUFACTURER'S "INSTALLATION, OPERATION AND MAINTENANCE MANUAL," ETL LISTING, STATE AND LOCAL CODES. FANS SHALL BE SUPPORTED INDEPENDENTLY FROM THE GREASE DUCT SECTIONS. PROTECT GREASE DUCT FROM TWISTING OR MOVEMENT CAUSED BY FAN TORQUE OR VIBRATION.

CERTIFICATIONS:
THE DW-2R SERIES HAS BEEN CERTIFIED BY ITS. THIS CERTIFICATION MARK INDICATES THAT THE PRODUCT HAS BEEN TESTED TO AND HAS MET THE MINIUM REQUIREMENTS OF A WIDELY RECOGNIZED (CONSENSUS) U.S. AND CANADIAN PRODUCTS SAFETY STANDARD. THAT THE MANUFACTURING SITE HAS BEEN AUDITED, AND THAT THE APPLICANT HAS AGRRED TO A PROGRAM OF PERIODIC FACTORY FOLLOW-UP INSPECTIONS TO VERIFY CONTINUED PERFORMANCE.

Grease exhaust ducts, for Type I hoods, are to be Captive-Aire Systems, Inc. Model DW-2R factory built double wall grease duct, with integral reduced clearance insulation, or approved equal. Grease duct to be ETL Listed to UL 1978 and UL 2221.

COLORADO LICENSED
ROBERT SHANE FRY
5181
PROFESSIONAL ENGINEER
12/16/2022

CAIRN DESIGN LLC
leading high performance building solutions
1805 Sheely Drive
Fort Collins, CO 80526
voice: (970)-286-7968
cairndesignllc.com

FRY ENGINEERING
FRY ENGINEERING, INC.
970-658-3665
SHANE@FRYENG.COM
WWW.FRYENG.COM
2702 BIANCO DR.
FORT COLLINS, CO 80521

The mechanical drawings and designs herein are instruments of professional service and are intended for one-time use in the construction of this project. They are and shall remain the sole property of Fry Engineering, Inc. They may not be reproduced or used for any other purpose without express written permission from Fry Engineering, Inc.
Copyright 2022, Fry Engineering, Inc.

DEMAND CONTROL VENTILATION HOOD CONTROL PANEL SPECIFICATIONS:

- CONTROLS SHALL BE LISTED BY ETL (UL 508A) AND SHALL COMPLY WITH DEMAND VENTILATION SYSTEM TURNDOWN REQUIREMENTS OUTLINED IN IECC 403.2.8 (2015).
- THE CONTROL ENCLOSURE SHALL BE NEMA 1 RATED AND LISTED FOR INSTALLATION INSIDE OF THE EXHAUST HOOD UTILITY CABINET. THE CONTROL ENCLOSURE MAY BE CONSTRUCTED OF STAINLESS STEEL OR PAINTED STEEL.
- TEMPERATURE PROBE(S) LOCATED IN THE EXHAUST DUCT RISER(S) SHALL BE CONSTRUCTED OF STAINLESS STEEL.
- A DIGITAL CONTROLLER SHALL BE PROVIDED TO ACTIVATE THE HOOD EXHAUST FANS DYNAMICALLY BASED ON A FIXED DIFFERENTIAL BETWEEN THE AMBIENT AND DUCT TEMPERATURES SENSORS. THIS FUNCTION SHALL MEET THE REQUIREMENTS OF IMC 507.1.1.
- A DIGITAL CONTROLLER SHALL PROVIDE ADJUSTABLE HYSTERESIS SETTINGS TO PREVENT CYCLING OF THE FANS AFTER THE COOKING APPLIANCES HAVE BEEN TURNED OFF AND/OR THE HEAT IN THE EXHAUST SYSTEM IS REDUCED.
- A DIGITAL CONTROLLER SHALL PROVIDE AN ADJUSTABLE MINIMUM FAN RUN-TIME SETTING TO PREVENT FAN CYCLING.
- VARIABLE FREQUENCY DRIVES (VFDS) SHALL BE PROVIDED FOR FANS AS REQUIRED. THE DIGITAL CONTROLLER SHALL MODULATE THE VFDS BETWEEN A MINIMUM SETPOINT AND A MAXIMUM SETPOINT ON DEMAND. THE DUCT TEMPERATURE SENSOR INPUT(S) TO THE DIGITAL CONTROLLER SHALL BE USED TO CALCULATE THE SPEED REFERENCE SIGNAL.
- THE VFD SPEED RANGE OF OPERATION SHALL BE FROM 0% TO 100% FOR THE SYSTEM, WITH THE ACTUAL MINIMUM SPEED SET AS REQUIRED TO MEET MINIMUM VENTILATION REQUIREMENTS.
- AN INTERNAL ALGORITHM TO THE DIGITAL CONTROLLER SHALL MODULATE SUPPLY FAN VFD SPEED PROPORTIONAL TO ALL EXHAUST FANS THAT ARE LOCATED IN THE SAME FAN GROUP AS THE SUPPLY FAN.
- THE SYSTEM SHALL OPERATE IN PREP MODE DURING LIGHT COOKING LOAD OR COOL DOWN MODE WHEN SUFFICIENT HEAT REMAINS UNDERNEATH THE HOOD SYSTEM AFTER COOKING OPERATIONS HAVE COMPLETED. OPERATION DURING EITHER OF THESE PERIODS WILL DISABLE THE SUPPLY FANS AND PROVIDE AN EXHAUST FAN SPEED THAT IS EQUAL TO THE MINIMUM VENTILATION REQUIREMENT.
- A DIGITAL CONTROLLER SHALL DISABLE THE SUPPLY FAN(S), ACTIVATE THE EXHAUST FAN(S), ACTIVATE THE APPLIANCE SHUNT TRIP, AND DISABLE AN ELECTRIC GAS VALVE AUTOMATICALLY WHEN FIRE CONDITION IS DETECTED ON A COVERED HOOD.
- A DIGITAL CONTROLLER SHALL ALLOW FOR EXTERNAL BMS FAN CONTROL VIA DRY CONTACT (EXTERNAL CONTROL SHALL NOT OVERRIDE FAN OPERATION LOGIC AS REQUIRED BY CODE).
- AN LCD INTERFACE SHALL BE PROVIDED WITH THE FOLLOWING FEATURES:
  - A. ON/OFF PUSH BUTTON FAN & LIGHT SWITCH ACTIVATION.
  - B. INTEGRATED GAS VALVE RESET FOR ELECTRONIC GAS VALVES (NO RESET RELAY REQUIRED).
  - C. VFD FAULT DISPLAY WITH AUDIBLE & VISUAL ALARM NOTIFICATION.
  - D. DUCT TEMPERATURE SENSOR FAILURE DETECTION WITH AUDIBLE & VISUAL ALARM NOTIFICATION.
  - E. MIS-WIRED DUCT TEMPERATURE SENSOR DETECTION WITH AUDIBLE & VISUAL ALARM NOTIFICATION.
  - F. A SINGLE LOW VOLTAGE CAT-5 RJ45 WIRING CONNECTION.
  - G. AN ENERGY SAVINGS INDICATOR THAT UTILIZES MEASURED KWH FROM THE VFDS.

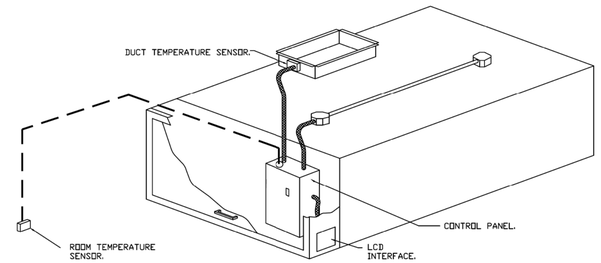

TYPICAL HOOD CONTROL PANEL INSTALLATION

SEQUENCE OF OPERATIONS:

THE HOOD CONTROL PANEL IS CAPABLE OF OPERATING IN ONE OR MORE OF THE FOLLOWING STATES AT ANY GIVEN TIME:

- AUTOMATIC: THE SYSTEM OPERATES BASED ON THE DIFFERENTIAL BETWEEN ROOM TEMPERATURE AND THE TEMPERATURE AT THE HOOD CAVITY OR EXHAUST DUCT COLLAR. FANS ACTIVATE AT A CONFIGURABLE TEMPERATURE DIFFERENTIAL THRESHOLD. DEPENDING ON THE JOB CONFIGURATION EACH FAN ZONE CAN BE CONFIGURED AS STATIC OR DYNAMIC. THESE TERMS REFER TO WHETHER A VARIABLE MOTOR (SUCH AS EC MOTORS OR VFD DRIVEN MOTORS) MODULATE WITH TEMPERATURE. IF THE PANEL IS EQUIPPED WITH VARIABLE SPEED FANS AND THE ZONE IS DEFINED AS "DYNAMIC", THESE WILL MODULATE WITHIN A USER-DEFINED RANGE BASED ON THE TEMPERATURE DIFFERENTIAL. PANELS EQUIPPED WITH VARIABLE SPEED FANS AND A FAN ZONE DEFINED AS "STATIC", FANS WILL RUN AT A SET SPEED CALCULATED FOR THE DRIVE. DEMAND CONTROL VENTILATION SYSTEMS ARE CAPABLE OF MODULATING EXHAUST AND MAKE UP AIR FAN SPEEDS PER THE REQUIREMENTS OUTLINED IN IECC 403.2.8.
- MANUAL: THE SYSTEM OPERATES BASED ON HUMAN INPUT FROM AN HMI.
- SCHEDULE: A WEEKLY SCHEDULE CAN BE SET TO RUN FANS FOR A SPECIFIED PERIOD THROUGHOUT THE DAY. THERE ARE THREE OCCUPIED TIMES PER DAY TO ALLOW FOR THE USER TO SET UP A TIME THAT IS SUITABLE TO THEIR NEEDS. ANY TIME THAT IS WITHIN THE DEFINED OCCUPIED TIME, THE SYSTEM WILL RUN AT MODULATION MODE AND FOLLOW THE FAN PROCEDURE ALGORITHM BASED ON TEMPERATURE DURING THIS TIME. DURING UNOCCUPIED TIME, THE SYSTEM WILL HAVE AN EXTRA OFFSET TO PREVENT UNINTENDED ACTIVATION OF THE SYSTEM DURING A TIME WHERE THE SYSTEM IS NOT BEING OCCUPIED.
- OTHER: THE SYSTEM OPERATES BASED ON THE INPUT FROM AN EXTERNAL SOURCE (DDC, BMS OR HARD-WIRED INTERLOCK).
- FIRE: UPON ACTIVATION OF THE HOOD FIRE SUPPRESSION SYSTEM, THE EXHAUST FAN WILL COME ON OR CONTINUE TO TO RUN, THE HOOD MAKEUP AIR WILL SHUTDOWN, AND A SIGNAL WILL BE SENT FOR ACTIVATING THE SHUNT TRIP BREAKER PROVIDED BY THE ELECTRICIAN. FUEL GAS WILL SHUT OFF VIA A MECHANICAL/ELECTRICAL GAS VALVE ACTUATED BY THE HOOD FIRE SUPPRESSION SYSTEM.

HOOD / FAN(S) SEQUENCE OF OPERATION

NORMAL MODE: EXHAUST FAN 1 (EF1) & MAKE-UP AIR FAN (SF1) ARE ENERGIZED CONCURRENTLY BY FAN SWITCH OR TEMPERATURE SENSOR(S) IN HOOD(S) (IMC 507.1.1).

FIRE MODE: EF1 TO ENERGIZE. MAKE-UP AIR FAN (SF1), LIGHTS IN HOOD AND POWER UNDER HOOD TO SHUT DOWN. POWER & FUEL TO APPLIANCES UNDER HOOD TO SHUT OFF.

ELECTRICAL NOTE:
JOBSITE ELECTRICIAN TO PROVIDE ALL ADDITIONAL WIRING AS NECESSARY TO FACILITATE THE ABOVE SEQUENCES OR OPERATION. SOME WIRING MAY NOT BE SHOWN.

ELECTRICAL NOTE:
The electrical information shown on this sheet is provided prior to manufacturing. Electrical contractor (AND ALL OTHERS RELYING ON THIS INFORMATION) shall use this information as a general reference only. EC (AND ALL OTHERS RELYING ON THIS INFORMATION) shall field verify all information and shall review the as-manufactured schematics, provided with the equipment, for additional electrical requirements.

ELECTRICAL PACKAGE

NO	TAG	PACKAGE #	LOCATION	SWITCHES		OPTION	FANS CONTROLLED					
				LOCATION	QUANTITY		FAN TAG	TYPE	Φ	HP	VOLT	FLA
1		DCV-1111	UTILITY CABINET RIGHT	UTILITY CABINET RIGHT	1 LIGHT	SMART CONTROLS DCV	EF1	EXHAUST	3	2.000	208	6.1
				HOOD # 1	1 FAN		SF1	SUPPLY	3	1.500	208	6.6

Electrical Package Notes:
1. Manufacturer shall be Captive-Aire Systems, Inc. or approved equal make and model.

The hood systems are to be controlled by a factory built Demand Control Ventilation (DCV) system. DCV system shall include VFD's and controls for (1) exhaust fan(s) and (1) supply fan(s). This system shall modulate the exhaust and make-up air flow based on exhaust duct temperature. This system shall meet the IMC 507.1.1 automatic activation requirement.

PROJECT:
LOGAN COUNTY COMMUNITY CENTER ADDITION

SHEET TITLE:
HOOD CONTROL & EXHAUST DUCT DETAILS

ISSUE DATE:
BID/PERMIT
12/16/2022

REVISIONS:
-

PROJECT NO.:
2208

SHEET NO.
M-8

As instruments of service, these drawings and the design represented are the permanent property of Cairn Design, LLC. Reproduction or use of these drawings other than for the project intended, without written consent from the Designer, is prohibited. Unauthorized use will be subject to legal action.

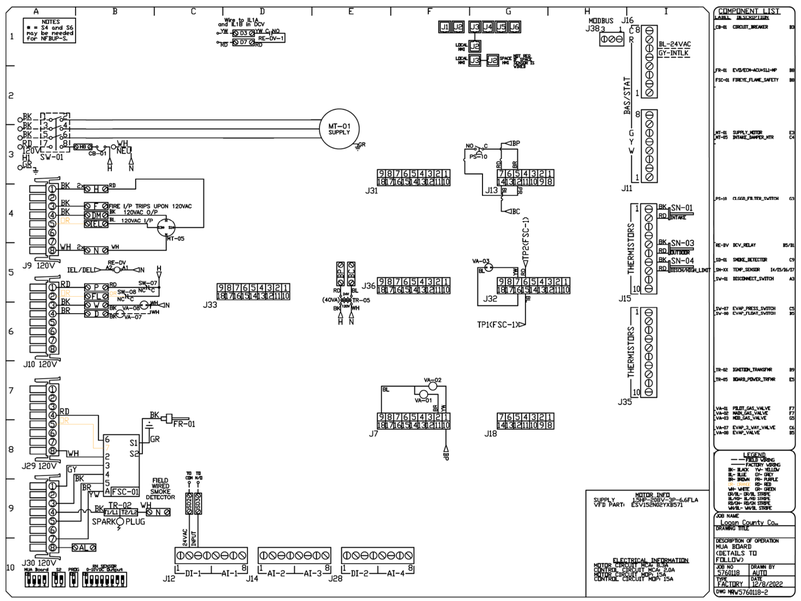

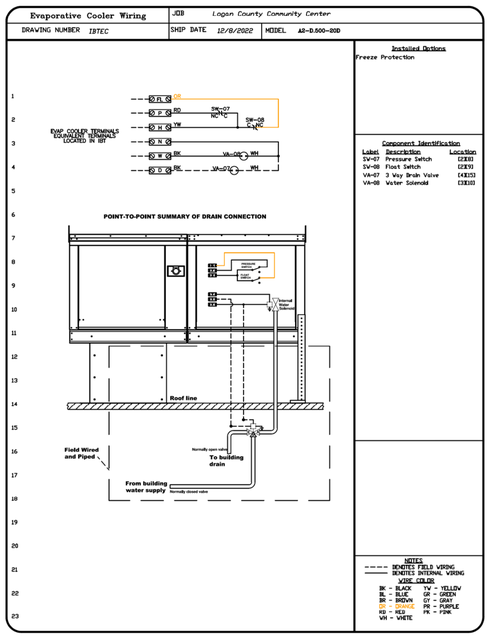

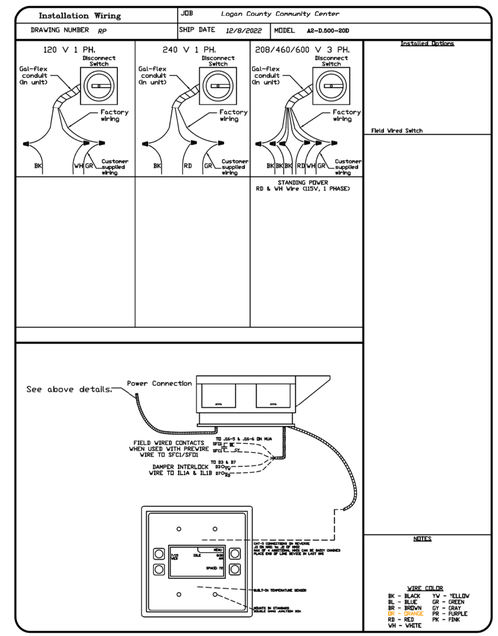

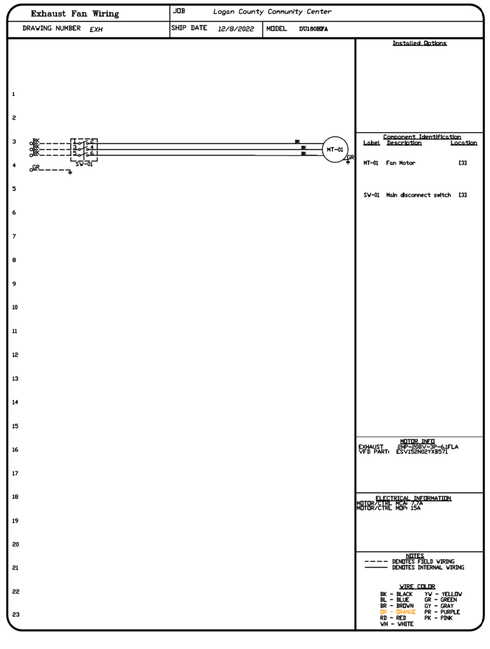

ELECTRICAL NOTE:
The electrical information shown on this sheet is provided prior to manufacturing. Electrical contractor (AND ALL OTHERS RELYING ON THIS INFORMATION) shall use this information as a general reference only. EC (AND ALL OTHERS RELYING ON THIS INFORMATION) shall field verify all information and shall review the as-manufactured schematics, provided with the equipment, for additional electrical requirements.

CAIRN DESIGN LLC
leading high performance building solutions

1805 Sheely Drive
Fort Collins, CO 80526

voice: (970)-286-7968

cairndesignllc.com

COLORADO LICENSED
ROBERT SHANE FRY
5817
12/16/2022
PROFESSIONAL ENGINEER

FRY ENGINEERING

FRY ENGINEERING, INC.
970-658-3665
SHANE@FRYENG.COM
WWW.FRYENG.COM
2702 BIANCO DR.
FORT COLLINS, CO 80521

The mechanical drawings and designs herein are instruments of professional service and are intended for one-time use in the construction of this project. They are and shall remain the sole property of Fry Engineering, Inc. They may not be reproduced or used for any other purpose without express written permission from Fry Engineering, Inc.
Copyright 2022, Fry Engineering, Inc.

PROJECT:

LOGAN COUNTY COMMUNITY CENTER ADDITION

SHEET TITLE:

HOOD FAN CONTROL DETAILS

ISSUE DATE:

BID/PERMIT
12/16/2022

REVISIONS:

-

PROJECT NO.:

2208

SHEET NO.

M-9

As instruments of service, these drawings and the design represented are the permanent property of Cairn Design, LLC. Reproduction or use of these drawings other than for the project intended, without written consent from the Designer, is prohibited. Unauthorized use will be subject to legal action.

MECHANICAL AND PLUMBING SYMBOLS AND ABBREVIATIONS

PLUMBING

- COLD WATER
- HOT WATER
- HOT WATER RETURN
- GAS
- SANITARY OR GREASE VENT LINE
- SAN — SANITARY WASTE / DRAIN LINE
- GW — GREASE WASTE / DRAIN LINE
- GM — GAS METER
- WM — WATER METER
- RPBP (REDUCED PRESSURE) / RPZ BACKFLOW PREVENTER)

PIPE FITTINGS

- ELBOW UP
- ELBOW DOWN
- TEE UP
- TEE DOWN
- CONCENTRIC REDUCER
- ECCENTRICAL REDUCER
- END CAP
- UNION
- FLANGED CONNECTION
- FLOW ARROW
- PIPE ANCHOR
- EXPANSION JOINT
- PIPE SLEEVE
- PIPE ALIGNMENT GUIDES
- FLEX CONNECTOR
- PIPE PITCH ARROW (DOWN IN ARROW DIRECTION)
- PRESSURE GAUGE
- AAV — AUTOMATIC AIR VENT
- COMPOUND GAUGE
- AIR CHAMBER
- SHOCK ABSORBER
- ELBOW
- TEE
- CO — CLEANOUT
- GCO — GRADE CLEANOUT
- FD — FLOOR DRAIN
- THERMOMETER

DUCT SYMBOLS

- OR — VOLUME DAMPER
- SUPPLY DUCT UP
- RETURN OR EXHAUST DUCT UP
- SUPPLY DUCT DOWN
- RETURN OR EXHAUST DUCT DOWN
- INTERNAL LINED DUCT
- FD — FIRE DAMPER (FD) IN DUCT
- FSD — COMBINATION FIRE/SMOKE DAMPER (FSD) IN DUCT
- SD — SMOKE DAMPER (SD) IN DUCT
- ACCESS PANEL

VALVES

- SHUT-OFF VALVE
- VERTICAL SHUT-OFF/NEEDLE VALVE
- BALANCING VALVE
- CHECK VALVE
- PRESSURE REDUCING VALVE
- MAKEUP WATER VALVE
- FCV — FLOW CONTROL VALVE
- SAFETY/PRESSURE RELIEF VALVE
- AUTOMATIC AIR VENT
- TEMP/PRESSURE RELIEF VALVE
- CONTROL VALVE (TCV)
- THERMOSTATIC MIXING VALVE
- THROTTLING VALVE

TEMPERATURE CONTROL/MONITORING

- T_H — ROOM THERMOSTAT (HEAT)
- $T_{H,C}$ — ROOM THERMOSTAT (HEAT/COOL)
- T_C — ROOM THERMOSTAT (COOL)
- S — SENSOR
- T — DUCT THERMOSTAT (PNEUMATIC)
- T_E — DUCT THERMOSTAT (ELECTRIC)
- H — HUMIDISTAT
- CO_2 — CARBON DIOXIDE SENSOR
- FS — FLOW SWITCH
- T — TEMPERATURE SENSOR
- FM — FLOW METER
- M — MOTORIZED DAMPER
- DPT — DIFFERENTIAL PRESSURE TRANSMITTER
- PETE'S PLUG
- VFD — VARIABLE FREQUENCY DRIVE
- TCP — TEMPERATURE CONTROL PANEL

AIR TERMINAL SYMBOLS

- T-BAR CEILING SUPPLY DIFFUSER
- T-BAR CEILING RETURN OR EXHAUST GRILLE
- 10"ø-250-3 — DENOTES RETURN OR EXHAUST TERMINAL THROAT SIZE, AIRFLOW AND QUANTITY. THE EXAMPLE TAG IS FOR A TERMINAL WITH A 10" DIAMETER NECK AND 250 CFM FLOW RATE. THE THIRD NUMBER INDICATES THAT THESE SIZE AND FLOW PROPERTIES ARE TYPICAL OF 3 AIR TERMINALS.
- 10"X12"-250-3 — DENOTES RETURN OR EXHAUST TERMINAL THROAT SIZE, AIRFLOW AND QUANTITY. THE EXAMPLE TAG IS FOR A TERMINAL WITH A 10"X12 RECTANGULAR NECK AND 250 CFM FLOW RATE. THE THIRD NUMBER INDICATES THAT THESE SIZE AND FLOW PROPERTIES ARE TYPICAL OF 3 AIR TERMINALS.
- 12"ø-300-2 — DENOTES SUPPLY TERMINAL THROAT SIZE, AIRFLOW AND QUANTITY. THE EXAMPLE TAG IS FOR A TERMINAL WITH A 12" DIAMETER NECK AND 300 CFM FLOW RATE. THE THIRD NUMBER INDICATES THAT THESE SIZE AND FLOW PROPERTIES ARE TYPICAL OF 2 AIR TERMINALS.
- 12"X12"-300-2 — DENOTES SUPPLY TERMINAL THROAT SIZE, AIRFLOW AND QUANTITY. THE EXAMPLE TAG IS FOR A TERMINAL WITH A 12"X12" RECTANGULAR NECK AND 300 CFM FLOW RATE. THE THIRD NUMBER INDICATES THAT THESE SIZE AND FLOW PROPERTIES ARE TYPICAL OF 2 AIR TERMINALS.

ABBREVIATIONS

AD	AREA DRAIN
AFC	AUTOMATIC FLOW CONTROL
AFF	ABOVE FINISHED FLOOR
AHR	AIR HOSE REEL
AHU	AIR HANDLING UNIT
ALT	ALTERNATE
AP	ACCESS PANEL
AS	AIR SEPARATOR
BD	BLOWDOWN
BDD	BACKDRAFT/PRESSURE RELIEF DAMPER
BTU	BRITISH THERMAL UNIT
BV	BALANCE VALVE
CB	CATCH BASIN
CFH	CUBIC FEET PER HOUR
CFM	CUBIC FEET PER MINUTE
CI	CAST IRON
CL	CENTERLINE
CO	CLEANOUT
COND	CONDENSATE
CONV	HYDRONIC CONVECTOR
CUH	CABINET UNIT HEATER
CW	COLD WATER
DB	DRY BULB
DF	DRINKING FOUNTAIN
DIA, ø	DIAMETER
DIFF	DIFFUSER
DS	DOWNSPOUT
DXC	DIRECT EXPANSION COOLING COIL
EA	EXHAUST AIR
EAT	ENTERING AIR TEMPERATURE
EBBR	ELECTRIC BASE BOARD RADIATION
EC	ELECTRICAL CONTRACTOR
EG	EXHAUST GRILLE
ECONV	ELECTRIC CONVECTOR
ECUH	ELECTRIC CABINET UNIT HEATER
EF	EXHAUST FAN
ELEC	ELECTRICAL
ELEV	ELEVATION
EOM	END OF MAIN DRIP
EPUH	ELECTRIC PROPELLER UNIT HEATER
ER	EXHAUST REGISTER
ERCP	ELECTRIC RADIANT CEILING PANEL
ESP	EXTERNAL STATIC PRESSURE
EWC	ELECTRIC WATER COOLER
EWH	ELECTRIC WATER HEATER
ET	EXPANSION TANK
EXTG, (E)	EXISTING
FD	FLOOR DRAIN OR FIRE DAMPER
FPVAV	FAN POWERED VAV
FOB	FLAT ON BOTTOM
FSD	COMBINATION FIRE/SMOKE DAMPER
FTR	HYDRONIC FINNED TUBE RADIATION
GC	GENERAL CONTRACTOR
GCO	GRADE CLEANOUT
GEN	GENERAL
GI	GREASE INTERCEPTOR
HB	HOSE BIBB
HTG	HEATING
HW	HOT WATER
ID	INTERNAL DIAMETER
INV. EL.	INVERT ELEVATION
LAT	LEAVING AIR TEMPERATURE
LAV	LAVATORY
MBH	1000 BTU/HOUR
MECH	MECHANICAL
MC	MECHANICAL CONTRACTOR
MH	MANHOLE
MS	MOP SINK
MUV	AUTOMATIC MAKE-UP VALVE
MV	MIXING VALVE
NC	NORMALLY CLOSED
NO	NORMALLY OPEN
NTS	NOT TO SCALE
OA	OUTSIDE AIR
OBD	OPPOSED BLADE DAMPER
OD	OUTSIDE DIAMETER
OFD	OVERFLOW DRAIN
OSD	OPEN SITE DRAIN
PC	PLUMBING CONTRACTOR
PFHX	PLATE AND FRAME HEAT EXCHANGER
PIV	POST INDICATOR VALVE
PLBG	PLUMBING
PRV	PRESSURE REDUCING VALVE
PUH	PROPELLER UNIT HEATER
RA	RETURN AIR
RCP	RADIANT CEILING HEATING PANEL
RCNP	REINFORCED CONCRETE PIPE
RD	ROOF DRAIN
RECIRC	RECIRCULATING
RG	RETURN GRILLE
RPZ	REDUCED PRESSURE BACKFLOW PREVENTER
RR	RETURN REGISTER
RV	ROOF INTAKE VENT
RRV	ROOF RELIEF VENT
SA	SUPPLY AIR
SAN	SANITARY
SD	SMOKE DAMPER
SG	SUPPLY GRILLE
SHDR	SHOWER DRAIN
SK	SINK
SR	SUPPLY REGISTER
SS	STAINLESS STEEL
STHX	SHELL AND TUBE HEAT EXCHANGER
TCC	TEMPERATURE CONTROL CONTRACTOR
TCP	TEMPERATURE CONTROL PANEL
TG	TRANSFER GRILLE
TO	TRANSFER OPENING
TP	TRAP PRIMER LINE
TYP	TYPICAL
UR	URINAL
VAV	VARIABLE AIR VOLUME
VCP	VITRIFIED CLAY PIPE
VFD	VARIABLE FREQUENCY DRIVE
VS	VENT STACK
VTR	VENT THRU ROOF
W	WASTE
WB	WET BULB
WC	WATER CLOSET
WCO	WALL CLEANOUT
WH	WALL HYDRANT
WS	WASTE STACK

PUMPS

- PUMP

GENERAL

- OR OR — BREAK-LINE SYMBOL – INDICATES AN OBJECT, OR OBJECTS, CONTINUES BUT THE CONTINUATION BEYOND THE SYMBOL IS NOT SHOWN.

NOTE: NOT ALL SYMBOLS OR ABBREVIATIONS ARE USED FOR ALL PROJECTS.

General Plumbing Specifications:

Definitions

Contractor shall mean the Plumbing Contractor.

AHJ shall mean Authority(s) Having Jurisdiction over the project.

Contract Documents shall mean these drawings and specifications along with any directive or changes issued to said documents.

General

The general conditions of the architectural general specifications shall apply to this section.

Scope

The contractor shall furnish all materials, labor, equipment and services to provide, install and commission the systems systems presented in the construction documents in a complete, operable, and AHJ approved manner that complies with the construction documents. The plumbing systems shall include the following as well as any other systems depicted or listed in the contract documents.

1. Drain, waste and vent systems.
2. All plumbing fixtures and equipment.
3. Domestic hot and cold water systems.
4. Natural gas piping and distribution systems.
5. Operating and temperature control systems.
6. Condensate piping.

Site Inspections / Verification

Contractor shall thoroughly inspect the job site to determine existing conditions and conflicts between the construction documents and plans prior to biding. Utility connection points shown on the plans are approximate and shall be field verified by the contractor. Contractor shall promptly report any conflicts to the mechanical engineer before proceeding with their bid or work. Contractor shall be responsible for any costs or delays arising from contractor's failure to thoroughly verify and report site conditions, conflicts or utility locations.

Plan Inspection / Verification

Contractor shall thoroughly inspect the plans, for all trades, to determine if any conflicts exist. All conflicts are to be reported to the Architect / Engineering promptly. Contractor shall be responsible for any costs or delays arising from contractor's failure to thoroughly inspect the plans for conflicts and report any conflicts.

Drawings and Intent

These drawings are diagrammatic in nature, and may not show all necessary valves, fittings, supports, dampers, insulation, offsets, etc. The contractor shall furnish complete and operable systems that meet the design intent and are in compliance with the construction documents. The contractor shall provide and install all necessary valves, fittings, supports, insulation, offsets, etc. as though they were explicitly called out in the construction documents. The contractor shall include these necessary items in their bid / contract and shall not charge any additional fees, beyond the bid / contract amount, for these items.

These drawings are diagrammatic in nature and shall not be scaled for exact measurements. Contractor shall refer to the architectural drawings for locations and measurements.

Coordination

Contractor shall be responsible for coordinating their work with all other trades. Contractor shall maintain their installation pace and timeframes in accordance with the General Contractor's pacing and timeframes so as not to delay the project or incur additional costs.

Permits and Licenses

Contractor shall apply for, pay for and obtain all required permits and licenses for this project. Contractor shall be responsible for all fees and taxes for their work, equipment, materials, permits and licenses.

Code Requirements

Contractor shall comply with all federal, state and local code requirements, amendments and regulations as determined by the authority having jurisdiction (AHJ). Contractor shall comply with utility company regulations.

Materials and Workmanship

All materials and equipment, furnished for this project, shall be new and without blemish or defect unless otherwise specified in these drawings and specifications. All work, furnished for this project, shall be completed by skilled workers trained and experienced in the work they are doing. All work shall be completed with high quality workmanship and in a neat manner. All work shall conform to the highest practices common in the industry, manufacturer's requirements and specifications, the construction documents, and industry standards.

Drawings and Specifications

The materials and equipment presented in the construction documents are the basis of design. These materials and equipment represent the designed performance, sizing, configuration, connections, form, aesthetics and function required. Contractor shall not substitute alternate materials, or equipment without engineer's written approval.

Alternate Materials and Equipment

Any requests for the substitution of alternate materials or equipment must be submitted to the engineer, for review, 2 weeks prior to bidding the project. Contractor shall be responsible for any costs required due to the substitution of approved alternate materials and equipment, including costs to other trades. All submissions shall be in accordance with the section titled "Shop Drawings and Submittals" in these specifications. Approval of an alternate will not alleviate the contractor of the responsibility to provide full and complete systems that meet the design intent and the requirements of the construction documents, even if the approved alternate does not meet these requirements.

Valves

All ball valves shall be full port valves. valves may only be used with fluids and gases for which they are designed, approved and listed.

Shop Drawings and Submittals

Contractor shall prepare and submit, to the General Contractor, shop drawings, cut sheets and submittals for all equipment, services, and materials to be provided and installed in accordance with the construction documents. General Contractor shall review these submittals for compliance with the construction documents before sending them to the engineer for review. If the General contractor determines that the equipment, services and materials, as depicted in the submittals, comply with the contract documents, the General Contractor shall then submit the submittals to the engineer for review along with a cover letter from the General Contractor indicating they have reviewed the submittals and found them to be in compliance with the contract documents. All submissions must be provided to the engineer a minimum of 2 weeks prior to ordering any material or equipment and 2 weeks prior to providing any services.

This same general submittal procedure shall be utilized for any requests for the substitution of alternate materials and equipment.

Complete and Functional Systems

Contractor shall provide and install complete and fully functional systems which produce the performance characteristics (as installed) required by the construction documents. These systems shall include all necessary components including valves, cleanouts, reducers, pressure reducers, backflow preventers, vacuum breakers, dampers, access doors, controls, thermostats, etc.

Domestic Water Supply Systems

All domestic hot and cold water systems, piping, fixtures and equipment will be thoroughly purged and disinfected (in accordance with International Plumbing Code section 610 requirements,) by the contractor, prior to turning the systems over to the owner or prior to putting the systems into use, whichever occurs first.

Equipment Protection

Contractor shall be responsible for protecting all fixtures, materials and equipment during construction and until final acceptance by the owner.

Delivery, Storage and Handling

Contractor shall be responsible for the delivery, storage and handling of all parts, materials, equipment and fixtures within the scope of the plumbing systems.

Operation and Maintenance Manuals

Save, compile and bind three copies of all operation and maintenance manuals as well as specifications, warranties and cut sheets for all plumbing systems, components, and materials. Provide the bound manuals to the project coordinator, for the owner's use, before project closeout.

Owner Training

Provide onsite training on all plumbing systems and equipment to the owner or owner's designees at a time that is acceptable to the owner. This training shall cover operation and maintenance and shall be provided at no additional cost.

Equipment, Valve, and Pipe Identification - Labeling

All equipment, pipes, components and valves shall be identified, labeled and tagged in accordance with the International Plumbing Code as adopted and amended by the AHJ.

Cutting and Patching

Provide all trenching, cutting, patching, repair and backfill necessary to complete the plumbing work.

Contractor shall be responsible for any repairs to finishes necessitated by their work.

Dissimilar Metals

Provide dielectric connections between all dissimilar metals.

Exterior Wall Routing

All pipes routed in exterior walls and ceiling / roof assemblies shall be located on the conditioned space side of the wall / ceiling / roof insulation.

Penetrations

Provide sleeves, escutcheons, and flashing around all pipe penetrations of building construction.

Piping Materials

Unless noted differently elsewhere on the plans, piping materials shall meet the following minimum material requirements as well as all plumbing code required standards.

Drain, Waste and Vent: Solid core schedule 40 PVC, Gas Piping: Schedule 40 Steel, Domestic Water Piping: Type L - hard drawn copper. Underground Domestic Water Piping: Type K tubing in one continuous length without any joints, fittings or couplings located underground.

Domestic Pipe Insulation - Above Grade

All Domestic Cold, Hot and Hot Water Re-circulation piping shall be insulated with jacketed fiberglass pipe insulation. The insulation shall have a protective jacket with factory applied vapor barrier. Vapor barrier shall have a permeability rating of 0.02 perms. Jacket shall have a self sealing lap seam. The insulation shall conform to the specifications listed in the Minimum Pipe Insulation Thickness table on this sheet.

Warranty

All services, work, equipment and materials supplied for this project shall include a full 1 year warranty covering all materials and labor from the date of owner's final acceptance. In addition, contractor will provide full manufacturer's warranty to the owner in the event that the manufacturer's warranty is longer or more favorable to the owner.

Work Area - Cleanliness

Contractor shall maintain the work area in a neat, clean and safe manner at all times. No excess materials are to be stored in the work area without the project manager's prior approval.

Record Set of Drawings

Contractor shall maintain a current and accurate marked-up set of drawings indicating all systems, components, materials, routing, etc. as installed. All deviations from the as designed construction plans are to be noted in red. Provide the marked-up record set to the owner and a Provide an electronic copy, of the record set, to mechanical engineer a minimum of one week prior to the final inspection. The electronic copy shall be an Adobe PDF file. The electronic copy shall be in color, shall be legible and shall be in a format and size that is acceptable to the mechanical engineer.

Cleaning

Contractor shall provide final cleaning of all fixtures, systems and equipment provided by the contractor. Cleaning shall be provided immediately prior to handing the project over to the owner. Cleaning to be to owner's satisfaction

Testing and Balancing

All HVAC and hydronic systems shall be tested, adjusted and balanced by a third party testing, adjusting and balancing (TAB) firm not connected to the contractor by financial, ownership, common employee or other like circumstances. The TAB firm shall be NEBB or AABC certified. Contractor shall engage and pay for the TAB firm's services. All balancing shall be in accordance with NEBB procedures and shall be reported on NEBB or approved equal forms.

All air systems shall be balanced within +/- 5% of the airflow shown on plans. Contractor shall supply and install any additional dampers required for balancing for no additional charge. Contractor shall make any repairs necessary for the balancing for no additional charge.

All hydronic systems shall be balanced within +/- 5% of the flow shown on plans. Contractor shall supply and install any additional valves or fittings required for balancing at no additional charge. Contractor shall make any repairs necessary for the balancing for no additional charge.

At a minimum, balance report shall include gross airflow (Supply, Return, Exhaust, Outside Air, etc.) for each system, individual air terminal airflow, system static pressures, equipment operating characteristics (RPM, amps, volts, temperature difference, etc.), equipment and drive physical characteristics, all hydronic flows and pressure drops, pump nameplate data, equipment and drive nameplate data and motor starter data.

A copy of final balance report shall be provided to the mechanical engineer one week prior to contractor's submittal for final payment or final building department inspection, whichever occurs first.

Commissioning of Building Systems

All heating, ventilation, air conditioning, refrigeration and service water heating systems are to be commissioned, by an approved agency. Commissioning firm shall develop a commissioning plan and submit plan to mechanical engineer for approval, prior to starting any commissioning. Commissioning shall fully comply with the requirements of IECC C408.2. All deficiencies noted during commissioning shall be corrected and the affected systems shall be re-commissioned. An electronic copy (pdf format) of the final commissioning report shall be submitted to the building owner, mechanical engineer and architect for review and approval. The report shall be submitted, for review, a maximum of 30 days after final inspection. The contractor shall be responsible for ensuring these requirements are met. The contractor shall engage and pay for an approved commissioning firm to perform the commissioning. Firms wishing to provide commissioning shall submit qualifications, samples of work on similar projects and a scope of work description to mechanical engineer for prior approval.

Discrepancies Between General Plumbing Specifications and Plans

When there is a discrepancy between these General Plumbing Specifications and a specific note, detail or specification, on the plumbing plans, the note, detail or specification, on the plumbing plans, shall take precedence.

Provide, Furnish and Install

When the plans say Provide or Furnish an item or material the contractor shall interpret these terms to include the installation of the item or material in question, unless otherwise specified on the plans.

Request for Information (RFI):

The General Contractor may submit a request for information (RFI) when it is necessary to clarify the information presented in the mechanical plans or to resolve a conflict in the mechanical design. For a project where a General Contractor is not engaged, the prime contractor in charge of the construction or management of the project may submit RFI's. RFI's shall be submitted to the mechanical engineer (ME) for review and response. Allow a minimum of seven working days for a response to submitted RFI's.

The following RFI's may be rejected without action:

-Requests for approval of submittals.

-Requests for approval of substitutions.

-Requests for approval of contractor's methods and means.
-Requests for information already contained in the plans and specifications.

-Incomplete or improperly prepared RFI's.

-Excessive or unnecessary RFI's (as determined by the mechanical engineer).

RFI's shall clearly state the specific information or clarification that is being requested. RFI's shall reference the specific plan item, detail, field condition, and / or specification in question and shall fully describe the conflict or ambiguity. RFI's shall include photos, sketches, coordination drawings, shop drawings, measurements, dimensions, descriptions, product data, etc. as is necessary to fully describe the request and any proposed resolutions.

RFI's shall include two proposed resolutions in the RFI submittal. The proposed resolutions shall include a detailed description of the resolution, the impacts on construction timeline, and the impacts on the project costs. In addition, contractor shall include a detailed description of the impact of the proposed resolutions to other trades and the project owner.

MINIMUM PIPE INSULATION THICKNESS (INCHES)

Fluid Operating Temperature Range (°F)	Insulation Conductivity		Nominal Pipe or Tube Size (Inches)		
	Conductivity Btu*in./(h*ft²*°F)	Mean Rating Temperature (°F)	<1	1 to <1.5	1.5 to <4
201–250	0.27–0.30	150	2.5	2.5	2.5
141–200	0.25–0.29	125	1.5	1.5	2
105–140	0.21–0.28	100	1.0	1	1.5
40–60	0.21–0.27	75	0.5	0.5	1.0
<40	0.20–0.26	50	0.5	1	1.0

APPLICABLE CODES:

2006 INTERNATIONAL BUILDING CODE (IBC)
2006 INTERNATIONAL MECHANICAL CODE (IMC)
2018 INTERNATIONAL PLUMBING CODE (IPC)
2006 INTERNATIONAL FUEL GAS CODE (IFGC)
2020 NATIONAL ELECTRIC CODE (NEC)
2006 INTERNATIONAL ENERGY CONSERVATION CODE (IECC)
2006 INTERNATIONAL EXISTING BUILDING CODE (IEBC)
2006 INTERNATIONAL FIRE CODE (IFC)
LOGAN COUNTY, CO LOCAL AMENDMENTS TO THE ABOVE CODES
–ADOPTED LOCAL AND STATE HEALTH DEPARTMENT REGULATIONS
–ALL OTHER RELEVANT CODES ADOPTED BY THE AHJ(S)
–STATE OF COLORADO LOCAL AMENDMENTS TO THE ABOVE ELECTRICAL, GAS, AND PLUMBING CODES

PLUMBING SHEET INDEX

SHEET NUMBER	SHEET TITLE
P-0.1	PLUMBING GENERAL SPECIFICATIONS & LEGEND
P-1	PLUMBING PLAN
P-2	PLUMBING DWV PLAN
P-2.1	PLUMBING ROOF PLAN
P-3	PLUMBING SCHEDULES & DETAILS

EXISTING CONDITIONS:

The existing conditions (systems, construction, dimensions, layout, sizes, utilities, etc.) presented in these plans relies on a combination of one or more of the following: owner representations, existing plans, field surveys, and other data provided to the engineer. Existing conditions may vary from what is depicted in these plans. The mechanical engineer shall not be liable for errors in existing conditions or omissions of existing conditions on these plans. Contractor shall be responsible for providing fully functional plumbing systems that meet the design intent. Therefore, contractor shall carefully and thoroughly examine the existing building and field verify, to their satisfaction, that the existing conditions (systems, construction, dimensions, layout, sizes, utilities, etc.) match the plans prior to contracting for any work on the project. Additional compensation will not be provided for contractor's failure to verify field conditions.

COLORADO LICENSED
BOBBY SHANE FRY
5817
12/16/2022
PROFESSIONAL ENGINEER

CAIRN DESIGN LLC
leading high performance building solutions
1805 Sheely Drive
Fort Collins, CO 80526
voice: (970)-286-7968
cairndesignllc.com

FRY ENGINEERING
FRY ENGINEERING, INC.
970-658-3665
SHANE@FRYENG.COM
WWW.FRYENG.COM
2702 BIANCO DR.
FORT COLLINS, CO 80521

The mechanical drawings and designs herein are instruments of professional service and are intended for one-time use in the construction of this project. They are and shall remain the sole property of Fry Engineering, Inc. They may not be reproduced or used for any other purpose without express written permission from Fry Engineering, Inc.
Copyright 2022, Fry Engineering, Inc.

PROJECT:

LOGAN COUNTY COMMUNITY CENTER

SHEET TITLE:

PLUMBING GENERAL SPECIFICATIONS & LEGEND

ISSUE DATE:

BID/PERMIT
12/16/2022

REVISIONS:

-

PROJECT NO.:
2208

SHEET NO.

P-0.1

As instruments of service, these drawings and the design represented are the permanent property of Cairn Design, LLC. Reproduction or use of these drawings other than for the project intended, without written consent from the Designer, is prohibited. Unauthorized use will be subject to legal action.

GENERAL NOTES:

1. Unless otherwise noted, the natural gas piping system is designed as a 7 inch w.c. system with 0.5 inch w.c. pressure drop. Plumbing contractor to provide gas pressure regulators at each appliance to reduce pressure to appliance manufacturers requirements as listed on appliance nameplate. Gas piping to appliance connections shall include a sediment trap and gas cock at each appliance. See "Typical Gas Appliance Connection Detail" on sheet P-3. Transition from line size to appliance connector size at appliance connection point down stream of all valves and regulators.
2. Exterior gas piping shall be cleaned and then painted with exterior grade latex paint. Color shall be as determined by the Architect or owner.
3. This drawing is diagrammatic and is intended to convey the general intent of the systems represented. Not all valves, fittings, offsets, materials or components are shown. Contractor shall furnish and install all components, offsets, parts, materials and labor necessary to provide complete, functional, code compliant plumbing / piping systems in accordance with the design intent.
4. All required isolation valves are not shown. Provide isolation valves on all domestic water branches.
5. Not all stops and supply tubes are shown on the plans. Provide stops with supply tubes at each hot and cold water connection to fixtures.
6. Provide a thermostatic mixing valve (MV) with integral check valves in the hot water supply line at each lavatory and hand sink (new & existing lavatories and hand sinks). See "TYPICAL THERMOSTATIC MIXING VALVE DETAIL" sheet P-3. The mixing valve shall be listed to ASSE 1070. The mixing valve shall limit the maximum water temperature to each fixture to 110°F. Coordinate access panel requirements with general contractor. PC to supply access panels for valves. GC to install access panels. Plumbing contractor shall be responsible for adjusting all valves.
7. Verify all rough-in locations and requirements with architectural plans and manufacturer's cut sheets / installation instructions.
8. DCW and DHW lines (or branches) serving individual fixtures shall be as indicated on this sheet, but not less than the full size of the fixture inlet, whichever is greater. Where the DCW or DHW line size, for an individual fixture, is not shown on this sheet, the line size shall be the full size of the fixture inlet. See fixture schedules and manufacturer's cut sheets for fixture inlet sizes.
9. Vertical piping to be routed in walls unless specifically called out and noted otherwise on plans. Piping may be shown offset (from walls) on plans for clarity.
10. Plumbing Contractor to vent all gas pressure regulators, in accordance with applicable codes, industry standards and regulator manufacturer's installation instructions. The most stringent requirements offering the highest level of safety shall apply. Vents shall be routed to the exterior of the building. Where the manufacturer's instructions, codes, standards and jobsite conditions allow, sidewall venting shall be preferred over roof venting. Field verify routing and termination of vents.
11. Seal all plumbing penetrations of fire rated assemblies and construction in accordance with IPC and IBC requirements. (Typical)
12. When a DCW or DHW line to an individual fixture is larger than the fixture connection, reduce the DCW or DHW line size at the fixture stop to match the fixture connection size. (Typical)
13. Provide and seal sleeves around all pipe penetrations of building construction. Pipe sleeves shall be two sizes bigger than the pipe they serve.
14. Provide and install all necessary supports and hangers to install the plumbing systems in a neat, workman like, approved manner in compliance with all relevant codes.
3. Cap and seal unused plumbing and gas piping lines and outlets per code requirements (IPC and IFGC requirements). All unused plumbing lines and outlets to be sealed water tight. All unused gas lines and outlets to be sealed gas tight.

SHEET DETAIL NOTES: (x)

1. Route 0.5" indirect drain line from 3-way valve to floor sink. Terminate with down-turned elbow and air gap. Install in accordance with I.P.C. 802.1.1, I.P.C. 802.2, and I.P.C. 802.3.
2. Furnish water hammer arrestor (HA). Furnish shutoff valve directly upstream of water hammer arrestor.
3. 3-Way drain valve with solenoid. Valve supplied by MC, installed by PC and wired by EC. Install in heated space. Field verify exact installation location. Maintain slope and elevation for proper drainage of water line from make-up air unit to floor sink.
4. Connect new 0.5" DCW (input) line to existing (adjacent) 1.25" DCW supply line. Field verify exact location of existing DCW line.
5. 0.5" Water supply (output) line to make-up air unit (SF1). Field verify exact appliance connection location before rough-in. Field verify routing of water line and coordinate exact routing with GC and other trades.
6. Install new hood fire suppression system automatic gas shutoff valve in gas line serving appliances under Type I hood. Valve to be 1.5" nominal size. Valve to include electrical solenoid and strainer. Valve to be electrically actuated by hood control panel. Valve to be ETL and / or UL listed for the intended use. Valve to be factory furnished with Fire System, installed by PC, and wired by EC. PC to provide shutoff valve and unions, for servicing, as indicated. Locate valve so it is not subject to freezing. Valve to be easily accessible without removing permanent construction. Install valve above drop ceiling. Field verify installation location and coordinate location / installation with Fire System contractor and MC.
7. Connect 2" gas line to new gas service stub-out in kitchen area. Gas service stub-out is provided by others. Field verify exact connection location. Furnish a shutoff valve at service connection point.
8. All moveable gas fired kitchen cooking equipment shall utilize a listed and approved flexible gas connector with quick disconnect fittings and appropriate appliance restraint. Flexible gas connector shall be Dormont Blue Hose Gas Connector Kits with SnapFast quick disconnect assembly, shutoff valve, elbows and restraint kit (or approved equal). Gas connector kit shall be UL listed and NSF approved for the intended use. Gas connector kits are provided by Kitchen Equipment Supplier and Installed by PC. (Typical)
9. Connect new 3-compartment sink to existing plumbing stub-outs (1/2" DCW, 1/2" DHW).

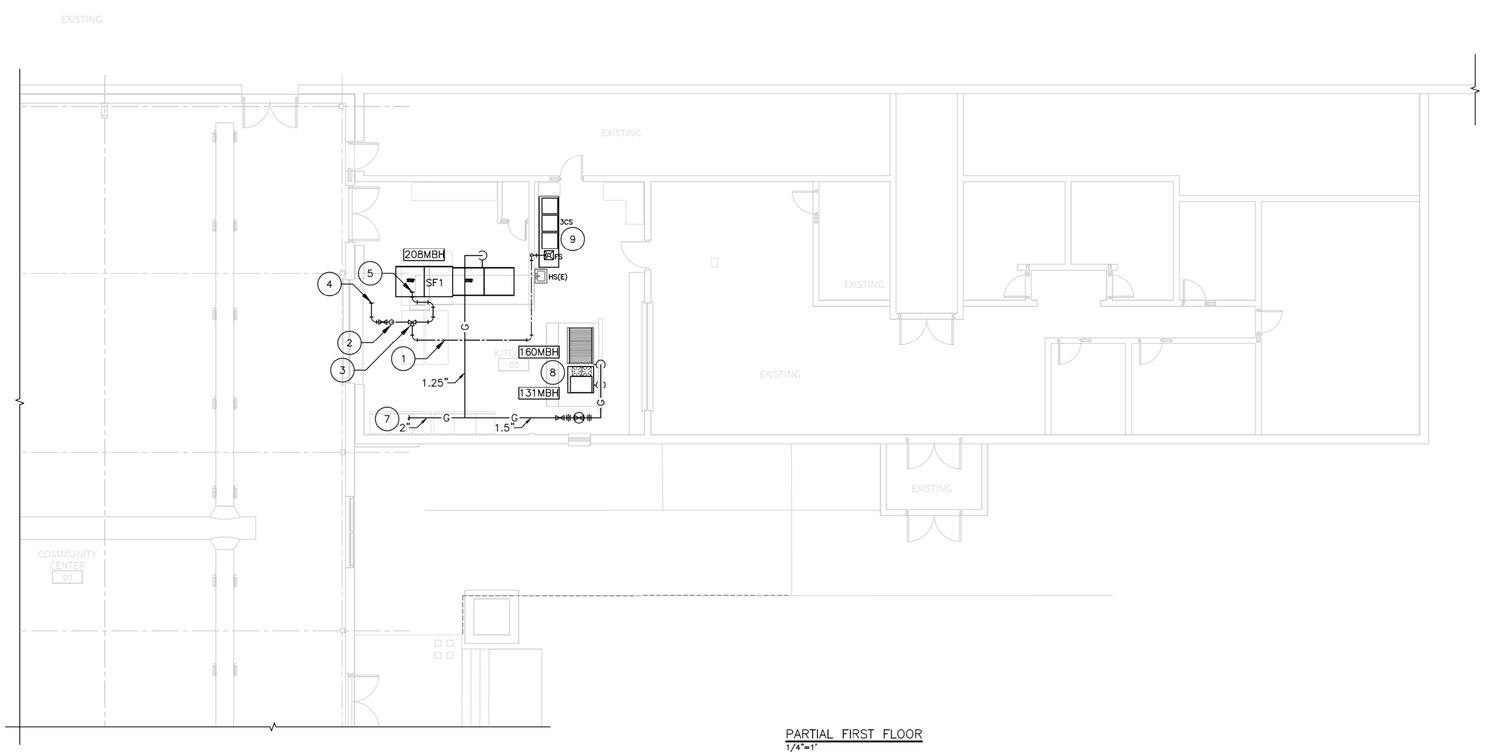

PARTIAL FIRST FLOOR
1/4"=1'

SHEET LEGEND

NEW WORK

EXISTING TO REMAIN

CAIRN DESIGN LLC
leading high performance building solutions

1805 Sheely Drive
Fort Collins, CO 80526

voice: (970)-286-7968

cairndesignllc.com

COLORADO LICENSED
BOBBY SHANE FRY
51817
12/16/2022
PROFESSIONAL ENGINEER

FRY ENGINEERING

FRY ENGINEERING, INC.
970-658-3665
SHANE@FRYENG.COM
WWW.FRYENG.COM
2702 BIANCO DR.
FORT COLLINS, CO 80521

The mechanical drawings and designs herein are instruments of professional service and are intended for one-time use in the construction of this project. They are and shall remain the sole property of Fry Engineering, Inc. They may not be reproduced or used for any other purpose without express written permission from Fry Engineering, Inc.
Copyright 2022, Fry Engineering, Inc.

PROJECT:

LOGAN COUNTY COMMUNITY CENTER ADDITION

SHEET TITLE:

PLUMBING PLAN

ISSUE DATE:

BID/PERMIT
12/16/2022

REVISIONS:

-

PROJECT NO.:
2208

SHEET NO.

P-1

As instruments of service, these drawings and the design represented are the permanent property of Cairn Design, LLC. Reproduction or use of these drawings other than for the project intended, without written consent from the Designer, is prohibited. Unauthorized use will be subject to legal action.

GENERAL NOTES:

1. This drawing is diagrammatic and is intended to convey the general intent of the systems represented. Not all valves, fittings, offsets, materials or components are shown. Contractor shall furnish and install all components, offsets, parts, materials and labor necessary to provide complete, functional, code compliant plumbing / piping systems in accordance with the design intent.
2. Verify all rough–in locations and requirements with architectural plans and manufacturer's cut sheets / installation instructions.
3. Seal all plumbing penetrations of fire rated assemblies and construction in accordance with IPC and IBC requirements. (Typical)
4. Not all sanitary cleanouts are shown. Provide all code required cleanouts.
5. For waste and vent pipe sizes not listed on this plan, see riser diagram and plumbing fixture table. (Sheet P–3)
6. Grade Cleanouts in traffic areas shall be rated for high traffic use or protected from damage. Furnish heavy duty cast iron tractor covers with adjusting collars. Covers shall be set flush with grade.
7. Wall cleanouts shall be furnished with cleanout covers as specified. Furnish flush / smooth bolts for covers.
8. Provide and seal sleeves around all pipe penetrations of building construction. Pipe sleeves shall be two sizes bigger than the pipe they serve.
9. Minimum slope for horizontal sanitary waste drainage pipe shall be as follows. 2" pipe and under shall slope 1/4" minimum per foot. 3" and 4" pipe shall slope 1/8" minimum per foot.
10. Provide and install all necessary supports to install the plumbing systems in a neat, workman like, approved manner in compliance with all relevant codes.
11. Vertical vent piping to be routed in walls unless otherwise called out / noted. Plans may show it offset for clarity.
12. Hand sink traps and tail pieces to be chrome plated brass with removable nut and slip joint design unless otherwise noted.
13. All exposed sink drain lines and traps to be DWV copper or stainless steel unless otherwise noted.
14. Terminate all plumbing vents (new and existing) a minimum of ten feet away from or three feet above any air intake openings into the building.
15. Seal all plumbing penetrations of fire rated assemblies and construction in accordance with IPC and IBC requirements. (Typical)
16. Minimum slope for horizontal grease waste (GW) drainage pipe shall be 1/4" slope per foot.
17. Furnish solids strainers for new and existing floor sinks. Submit proposed solids strainer cut sheets, to Mechanical Engineer, for approval prior to ordering / purchasing. (Typical)
18. Cap and seal unused drain lines and openings per code requirements (IPC and IFGC requirements). All unused drain lines to be sealed water tight.

SHEET DETAIL NOTES: (x)

1. Route 0.5" indirect drain line from 3–way valve to floor sink. Terminate with down–turned elbow and air gap. Install in accordance with I.P.C. 802.1.1, I.P.C. 802.2. and I.P.C. 802.3.
2. 3–Way drain valve with solenoid. Valve supplied by MC, installed by PC and wired by EC. Install in heated space. Field verify exact installation location. Maintain slope and elevation for proper drainage of water line from make–up air unit to floor sink.
3. Disconnect existing floor sink from sanitary drain and reconnect to new grease waste. Remove unused sanitary drain branches and cap unused openings in existing building sanitary drain line. (Typical of 3)
4. Indirect drain line from sink bowl to be routed to floor sink. Terminate with down–turned elbow and air gap. Provide separate drain lines for each sink compartment. Install in accordance with I.P.C. 802.1.1, I.P.C. 802.2. and 802.3. Drain line to be full size of sink outlet, but not less than 1.5" nominal size. (Typical).
5. Route indirect drain line from evaporative cooler to floor sink. Drain line to be full size of fixture outlet. Terminate with down–turned elbow and air gap. Install in accordance with I.P.C. 802.1.1, I.P.C. 802.2. and I.P.C. 802.3.
6. Split existing 4" sanitary drain line at indicated point to separate grease waste from sanitary drain. Add new cleanouts as indicated.
7. Add new cleanout to existing line.
8. Replace existing section of 2" and 2.5" grease waste with new 3" grease waste line.
9. 4" Grease waste to grease interceptor. See civil engineering plans for continuation, routing, installation methods, sizing, etc.

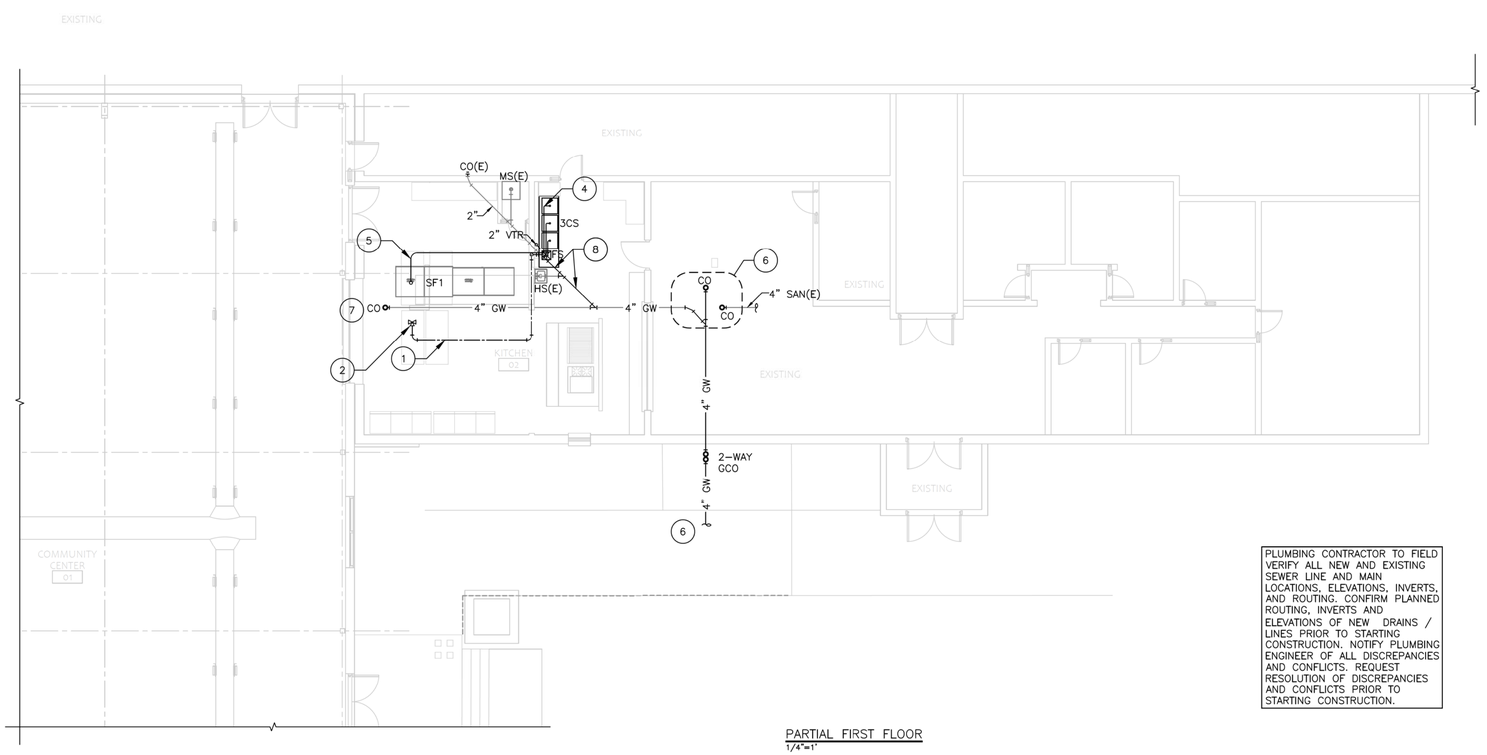

PARTIAL FIRST FLOOR
1/4"=1'

PLUMBING CONTRACTOR TO FIELD VERIFY ALL NEW AND EXISTING SEWER LINE AND MAIN LOCATIONS, ELEVATIONS, INVERTS, AND ROUTING. CONFIRM PLANNED ROUTING, INVERTS AND ELEVATIONS OF NEW DRAINS / LINES PRIOR TO STARTING CONSTRUCTION. NOTIFY PLUMBING ENGINEER OF ALL DISCREPANCIES AND CONFLICTS. REQUEST RESOLUTION OF DISCREPANCIES AND CONFLICTS PRIOR TO STARTING CONSTRUCTION.

SHEET LEGEND

NEW WORK

EXISTING TO REMAIN

CAIRN DESIGN LLC
leading high performance building solutions

1805 Sheely Drive
Fort Collins, CO 80526

voice: (970)-286-7968

cairndesignllc.com

COLORADO LICENSED
BOBBY SHANE FRY
51817
12/16/2022
PROFESSIONAL ENGINEER

FRY ENGINEERING

FRY ENGINEERING, INC.
970-658-3665
SHANE@FRYENG.COM
WWW.FRYENG.COM
2702 BIANCO DR.
FORT COLLINS, CO 80521

The mechanical drawings and designs herein are instruments of professional service and are intended for one-time use in the construction of this project. They are and shall remain the sole property of Fry Engineering, Inc. They may not be reproduced or used for any other purpose without express written permission from Fry Engineering, Inc.
Copyright 2022, Fry Engineering, Inc.

PROJECT:

LOGAN COUNTY
COMMUNITY CENTER
ADDITION

SHEET TITLE:

PLUMBING DWV PLAN

ISSUE DATE:

BID/PERMIT
12/16/2022

REVISIONS:

-

PROJECT NO.:
2208

SHEET NO.

P-2

As instruments of service, these drawings and the design represented are the permanent property of Cairn Design, LLC. Reproduction or use of these drawings other than for the project intended, without written consent from the Designer, is prohibited. Unauthorized use will be subject to legal action.

GENERAL NOTES:

1. Unless otherwise noted, the natural gas piping system is designed as a 7 inch w.c. system with 0.5 inch w.c. pressure drop. Plumbing contractor to provide gas pressure regulators at each appliance to reduce pressure to appliance manufacturers requirements as listed on appliance nameplate. Gas piping to appliance connections shall include a sediment trap and gas cock at each appliance. See "Typical Gas Appliance Connection Detail" on sheet P–3. Transition from line size to appliance connector size at appliance connection point down stream of all valves and regulators.
2. Exterior gas piping shall be cleaned and then painted with exterior grade latex paint. Color shall be as determined by the Architect or owner.
3. This drawing is diagrammatic and is intended to convey the general intent of the systems represented. Not all valves, fittings, offsets, materials or components are shown. Contractor shall furnish and install all components, offsets, parts, materials and labor necessary to provide complete, functional, code compliant plumbing / piping systems in accordance with the design intent.
4. All required isolation valves are not shown. Provide isolation valves on all domestic water branches.
5. Not all stops and supply tubes are shown on the plans. Provide stops with supply tubes at each hot and cold water connection to fixtures.
6. Provide a thermostatic mixing valve (MV) with integral check valves in the hot water supply line at each lavatory and hand sink (new & existing lavatories and hand sinks). See "TYPICAL THERMOSTATIC MIXING VALVE DETAIL" sheet P–3. The mixing valve shall be listed to ASSE 1070. The mixing valve shall limit the maximum water temperature to each fixture to 110°F. Coordinate access panel requirements with general contractor. PC to supply access panels for valves. GC to install access panels. Plumbing contractor shall be responsible for adjusting all valves.
7. Verify all rough–in locations and requirements with architectural plans and manufacturer's cut sheets / installation instructions.
8. DCW and DHW lines (or branches) serving individual fixtures shall be as indicated on this sheet, but not less than the full size of the fixture inlet, whichever is greater. Where the DCW or DHW line size, for an individual fixture, is not shown on this sheet, the line size shall be the full size of the fixture inlet. See fixture schedules and manufacturer's cut sheets for fixture inlet sizes.
9. Vertical piping to be routed in walls unless specifically called out and noted otherwise on plans. Piping may be shown offset (from walls) on plans for clarity.
10. Plumbing Contractor to vent all gas pressure regulators, in accordance with applicable codes, industry standards and regulator manufacturer's installation instructions. The most stringent requirements offering the highest level of safety shall apply. Vents shall be routed to the exterior of the building. Where the manufacturer's instructions, codes, standards and jobsite conditions allow, sidewall venting shall be preferred over roof venting. Field verify routing and termination of vents.
11. Seal all plumbing penetrations of fire rated assemblies and construction in accordance with IPC and IBC requirements. (Typical)
12. When a DCW or DHW line to an individual fixture is larger than the fixture connection, reduce the DCW or DHW line size at the fixture stop to match the fixture connection size. (Typical)
13. Not all sanitary cleanouts are shown. Provide all code required cleanouts.
14. For waste and vent pipe sizes not listed on this plan, see riser diagram and plumbing fixture table.
15. Grade Cleanouts in traffic areas shall be rated for high traffic use or protected from damage. Furnish heavy duty cast iron tractor covers with adjusting collars. Covers shall be set flush with grade.
16. Wall cleanouts shall be furnished with cleanout covers as specified. Furnish flush / smooth bolts for covers.
17. Provide and seal sleeves around all pipe penetrations of building construction. Pipe sleeves shall be two sizes bigger than the pipe they serve.
18. Minimum slope for horizontal sanitary waste drainage pipe shall be as follows. 2" pipe and under shall slope 1/4" minimum per foot. 3" and 4" pipe shall slope 1/8" minimum per foot.
19. Provide and install all necessary supports to install the plumbing systems in a neat, workman like, approved manner in compliance with all relevant codes.
20. Vertical vent piping to be routed in walls unless otherwise called out / noted. Plans may show it offset for clarity.
21. Hand sink traps and tail pieces to be chrome plated brass with removable nut and slip joint design unless otherwise noted.
22. All exposed sink drain lines and traps to be DWV copper or stainless steel unless otherwise noted.
23. Terminate all plumbing vents (new and existing) a minimum of ten feet away from or three feet above any air intake openings into the building.
24. Seal all plumbing penetrations of fire rated assemblies and construction in accordance with IPC and IBC requirements. (Typical)
25. Minimum slope for horizontal grease waste drainage pipe shall be 1/4" slope per foot.

SHEET DETAIL NOTES: (x)

1. Extend existing plumbing vent a minimum of three feet above new make–up air intake opening. (Typical of all plumbing vents located within 10 feet horizontally of make–up air intake.)

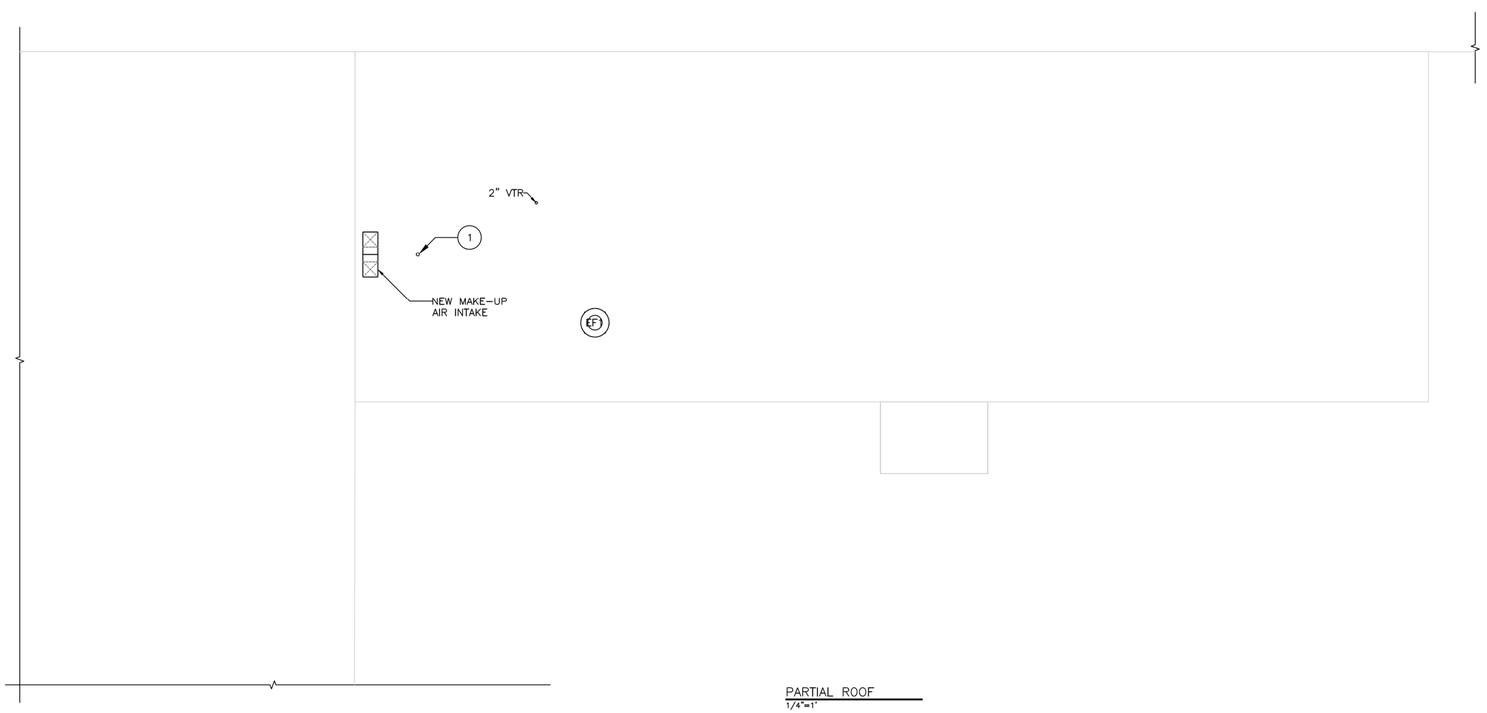

PARTIAL ROOF
1/4"=1'

SHEET LEGEND

NEW WORK

EXISTING TO REMAIN

CAIRN DESIGN LLC
leading high performance building solutions

1805 Sheely Drive
Fort Collins, CO 80526

voice: (970)-286-7968

cairndesignllc.com

COLORADO LICENSED
BOBBY SHANE FRY
51817
12/16/2022
PROFESSIONAL ENGINEER

FRY ENGINEERING

FRY ENGINEERING, INC.
970-658-3665
SHANE@FRYENG.COM
WWW.FRYENG.COM
2702 BIANCO DR.
FORT COLLINS, CO 80521

The mechanical drawings and designs herein are instruments of professional service and are intended for one-time use in the construction of this project. They are and shall remain the sole property of Fry Engineering, Inc. They may not be reproduced or used for any other purpose without express written permission from Fry Engineering, Inc.
Copyright 2022, Fry Engineering, Inc.

PROJECT:

LOGAN COUNTY
COMMUNITY CENTER
ADDITION

SHEET TITLE:

PLUMBING ROOF PLAN

ISSUE DATE:

BID/PERMIT
12/16/2022

REVISIONS:

-

PROJECT NO.:
2208

SHEET NO.

P-2.1

As instruments of service, these drawings and the design represented are the permanent property of Cairn Design, LLC. Reproduction or use of these drawings other than for the project intended, without written consent from the Designer, is prohibited. Unauthorized use will be subject to legal action.

PLUMBING FIXTURE TABLE

TAG	FIXTURE	MANUFACTURER	MODEL	NOTES	CONNECTIONS (in.)					DFU	WSFU		
					CW	HW	DRAIN / TRAP	VENT	REMARKS		COLD	HOT	TOTAL
FS	3" FLOOR SINK	JAY R. SMITH	3140-C-U-CI-15	1-5	–	–	3	2	FURNISH WITH SOLIDS STRAINER	5 MINIMUM	–	–	–
3CS	3-COMP SINK & FAUCET	PER ARCHITECTURAL PLANS	PER ARCHITECTURAL PLANS	3,5,7	1/2	1/2	1 1/2	–	INDIRECT WASTE & AIR GAP	2 – EACH COMP	3	3	4
FS(E)	EXISTING FLOOR SINK	–	–	1,3,4,8	–	–	–	–	FURNISH WITH SOLIDS STRAINER	5 MINIMUM	–	–	–
MS(E)	EXISTING MOP SINK	–	–	8	1/2	1/2	2	1 1/2		2	2.25	2.25	3
HS(E)	HAND SINK & FAUCET	–	–	8	1/2	1/2	1 1/2	1 1/2		1	1.5	1.5	2

1. FURNISH WITH SURE SEAL INLINE TRAP SEAL OR APPROVED EQUAL.
2. SUBMIT CUT SHEETS AND SPECIFICATIONS FOR ALL FIXTURES, TO OWNER, MECHANICAL ENGINEER, AND ARCHITECT, FOR APPROVAL PRIOR TO ORDERING / INSTALLING.
3. FURNISH SURE SEAL INLINE TRAP SEAL FOR EXISTING AND NEW FLOOR SINKS. OR APPROVED EQUAL.
4. FURNISH SOLIDS STRAINER FOR EXISTING AND NEW FLOOR SINKS.
5. EQUIPMENT FURNISHED AND INSTALLED BY PC.
6. EQUIPMENT FURNISHED BY OWNER AND INSTALLED BY PC.
7. SEE ARCHITECTURAL PLANS FOR ADDITIONAL FIXTURE REQUIREMENTS AND SPECIFICATIONS.
8. EXISTING FIXTURE. FIELD VERIFY ALL SPECIFICATIONS.

PLUMBING EQUIPMENT

TAG	DESCRIPTION	MANUFACTURER	MODEL	DETAILS	NOTES
MV	THERMOSTATIC MIXING VALVE	WATTS	LFUSG-B	INCLUDES MIXING VALVE WITH CHECK VALVES FOR HOT AND COLD WATER SUPPLY LINES. ASSE 1070.	1,2
HA	WATER HAMMER ARRESTOR	WATTS	LF05-S	LEAD FREE DOMESTIC WATER HAMMER ARRESTOR (SINGLE FIXTURE)	1,2
CO	FLOOR CLEANOUT	JOSAM	5500X-2-22-Z	COATED CAST IRON KLEENATRON II LEVELEZE FLOOR CLEANOUT, INTERNAL BRONZE TAPERED THREAD CLEANOUT PLUG, ADJUSTABLE CAST IRON HOUSING WITH MEDIUM-DUTY SCORIATED SECURED ROUND SATIN BRONZE COVER.	1,2
GCO	GRADE CLEANOUT	JAY R. SMITH	4263L-U-G	GALVANIZED CAST IRON CLEANOUT WITH TAPER THREAD BRONZE PLUG AND DOUBLE FLANGED HOUSING WITH HEAVY DUTY SECURED SCORIATED CAST IRON COVER WITH LIFTING DEVICE.	1,2
2-WAY GCO	TWO WAY GRADE CLEANOUT	JAY R. SMITH	4263L-U-G	PROVIDE TWO GALVANIZED CAST IRON CLEANOUTS WITH TAPER THREAD BRONZE PLUGS AND DOUBLE FLANGED HOUSINGS WITH HEAVY DUTY SECURED SCORIATED CAST IRON COVERS WITH LIFTING DEVICE. ALSO PROVIDE 2-WAY CLEANOUT FITTING PER DETAIL THIS SHEET.	1,2
WCO	WALL CLEANOUT COVER	JAY R. SMITH	4710-U	ROUND STAINLESS STEEL SHALLOW COVER WITH VANDAL PROOF CENTER SCREW	1,2

PLUMBING EQUIPMENT NOTES:

1. SUBMIT CUT SHEETS AND SPECIFICATIONS, FOR ALL PLUMBING EQUIPMENT, TO OWNER, MECHANICAL ENGINEER AND ARCHITECT, FOR APPROVAL PRIOR TO ORDERING / INSTALLING.
2. EQUIPMENT FURNISHED AND INSTALLED BY PC.
3. EQUIPMENT FURNISHED BY OWNER AND INSTALLED BY PC.

Logan County Community Center
Grease Drain Flow Rate Estimates
(Sizing Method per 2018 IMC)

Fixture Type	Fixture Quantity	Load / Fixture (DFU)	Load (DFU)	Notes
Mop Sink	1	2	2	
Hand Sink	1	1	1	(Based on DFU's for a Public Lavatory)
3-Comp Sink	1	6	6	(Based on DFU's for a Sink)
Total DFU Load			**9 DFU's**	
Peak System Load Estimate			**67.5 GPM**	(System Load Estimate = Load (DFU's) x 7.5 GPM per DFU)
MINIMUM INTERCEPTOR VOLUME AT 30 MINUTES RETENTION (30 Minutes Retention Per 2018 IMC Requirements)			**2025 GAL**	(Minimum Interceptor Volume = Flow Rate (GPM) X 30 Minute Retention Time)
INTERCEPTOR VOLUME WITH 15% SAFETY FACTOR			**2328.75 GAL**	(Interceptor Volume with safety factor = MINIMUM INTERCEPTOR VOLUME AT 30 MINUTES RETENTION X 115% safety factor)

A floor sink is present in the kitchen area. The floor sink serves as a receptor for fixtures listed in these calculations above and is not calculated separately.

NOTE: Fixture loads are per 2018 International Plumbing Code unless otherwise noted.
NOTE: See Civil plans for grease intercepter location, sizing, selection, sprcifications, and installation details.

COLORADO LICENSED
BOBBY SHANE FRY
51817
12/16/2022
PROFESSIONAL ENGINEER

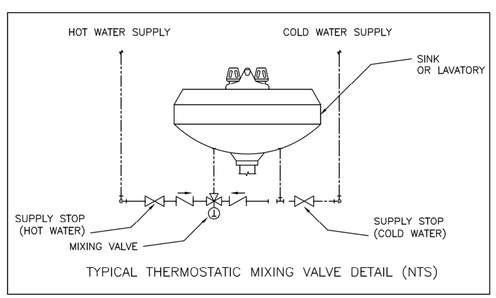

TYPICAL THERMOSTATIC MIXING VALVE DETAIL (NTS)

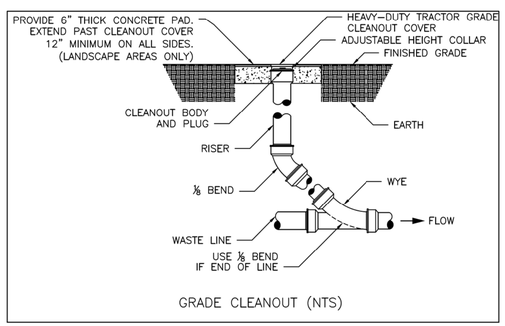

GRADE CLEANOUT (NTS)

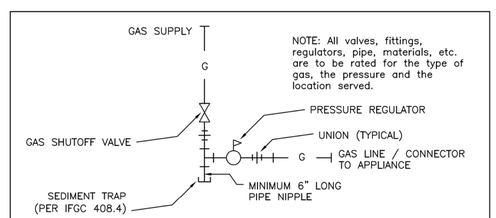

TYPICAL GAS APPLIANCE CONNECTION DETAIL (NTS)

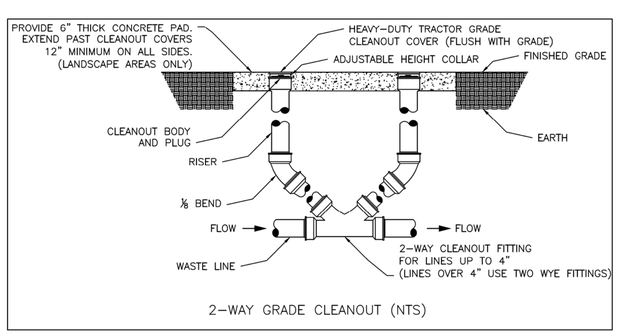

2-WAY GRADE CLEANOUT (NTS)

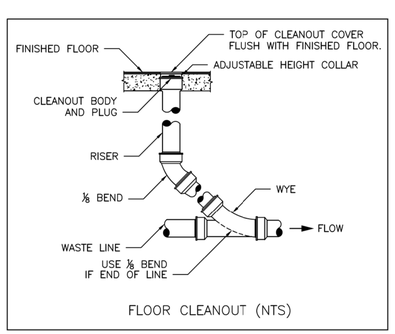

FLOOR CLEANOUT (NTS)

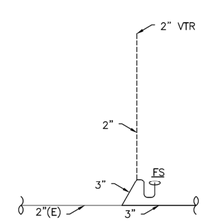

PARTIAL GREASE WASTE AND VENT RISER DIAGRAM – NEW FLOOR SINK
SCALE: NTS

CAIRN DESIGN LLC
leading high performance building solutions
1805 Sheely Drive
Fort Collins, CO 80526
voice: (970)-286-7968
cairndesignllc.com

FRY ENGINEERING
FRY ENGINEERING, INC.
970-658-3665
SHANE@FRYENG.COM
WWW.FRYENG.COM
2702 BIANCO DR.
FORT COLLINS, CO 80521

The mechanical drawings and designs herein are instruments of professional service and are intended for one-time use in the construction of this project. They are and shall remain the sole property of Fry Engineering, Inc. They may not be reproduced or used for any other purpose without express written permission from Fry Engineering, Inc.
Copyright 2022, Fry Engineering, Inc.

PROJECT:
LOGAN COUNTY COMMUNITY CENTER ADDITION

SHEET TITLE:
PLUMBING SCHEDULES & DETAILS

ISSUE DATE:
BID/PERMIT
12/16/2022

REVISIONS:
-

PROJECT NO.:
2208

SHEET NO.
P-3

As instruments of service, these drawings and the design represented are the permanent property of Cairn Design, LLC. Reproduction or use of these drawings other than for the project intended, without written consent from the Designer, is prohibited. Unauthorized use will be subject to legal action.

GENERAL CONSTRUCTION NOTES:

1. THE ELECTRICAL CONTRACTOR SHALL VERIFY THAT ALL ELECTRICAL ITEMS TO REMAIN OR BE RELOCATED AND REUSED ARE IN WORKING ORDER PRIOR TO ANY DEMOLITION WORK. IF THE EXISTING MATERIAL IS FOUND TO BE INOPERABLE, CONTRACTOR SHALL INFORM THE OWNER. ONCE ANY DEMOLITION WORK HAS BEGUN, ANY INOPERABLE OR DAMAGED MATERIAL SHALL BE REPAIRED OR REPLACED AT THE CONTRACTOR'S EXPENSE.
2. VERIFICATION OF EXISTING CONDITIONS. "INASMUCH AS THE REMODELING AND/OR REHABILITATION OF THE EXISTING BUILDING REQUIRES THAT CERTAIN ASSUMPTIONS BE MADE REGARDING EXISTING CONDITIONS, AND BECAUSE SOME OF THESE ASSUMPTIONS MAY NOT BE VERIFIABLE WITHOUT DESTROYING OTHERWISE ADEQUATE OR SERVICEABLE PORTIONS OF THE BUILDING, THE GENERAL CONTRACTOR AGREES THAT, EXCEPT FOR NEGLIGENCE ON THAT PART OF THE DESIGN PROFESSIONAL THE CONTRACTOR WILL HOLD HARMLESS, INDEMNIFY AND DEFEND THE DESIGN PROFESSIONAL FROM AND AGAINST ANY AND ALL CLAIMS ARISING OUT OF THE PROFESSIONAL SERVICES PROVIDED."
3. ANY ELECTRICAL ITEMS SHOWN OR NOT SHOWN ON THE PLANS, OR WHERE CIRCUITS IN EXISTING WALLS ARE REMOVED BY DEMOLITION, SHALL UPON COMPLETION OF REMODEL WORK BE LEFT IN WORKING CONDITION.
4. ALL PHASES OF THE ELECTRICAL WORK SHALL BE COORDINATED WITH THE ARCHITECT. WORK SHALL BE DONE IN A FASHION TO CAUSE AS LITTLE INCONVENIENCE AS POSSIBLE TO THE OWNER.
5. ELECTRICAL DEVICES NOTED TO BE REMOVED SHALL BE REMOVED BACK TO A POINT WHERE EXISTING CONDUIT CAN BE ABANDONED IN CONCEALED SPACES. REMOVE ALL WIRING FROM ABANDONED CONDUIT. ALL BOXES TO BE REMOVED SHALL BE TAKEN OUT OF WALLS AND HAVE HOLES REFINISHED TO MATCH WALL FINISH.
6. ELECTRICAL CONTRACTOR SHALL NOT DEFACE ANY AREAS OF THE BUILDING WHERE REMODELING IS NOT BEING DONE.
7. ROUTING OF EXISTING CONCEALED CONDUIT NOT KNOWN. LOCATION DETERMINED BY ELECTRICAL CONTRACTOR. ELECTRICAL CONTRACTOR SHALL RECIRCUIT AS NOTED UTILIZING ANY EXISTING CONDUIT. HE SHALL REMOVE EXISTING WIRE AND REPULL NEW. ALL NEW CONDUIT ADDED SHALL BE CONCEALED WHEREVER POSSIBLE.
8. SURFACE RACEWAY: WHEREVER CONCEALED CONDUIT IN FINISHED AREAS IS NOT POSSIBLE, ELECTRICAL CONTRACTOR SHALL INSTALL SURFACE MOUNTED RACEWAYS EQUAL TO WIREMOLD. RUN SURFACE RACEWAYS IN CORNER OF WALL AND CEILING. ALL RACEWAYS THAT ARE EXPOSED SHALL BE APPROVED BY ARCHITECT PRIOR TO ROUGH-IN.
9. TERMINATING AND SPLICING: MAKE ALL JOINTS AND SPLICES IN BRANCH CIRCUIT WIRING WITH APPROVED SOLDERLESS TOOL APPLIED OR TWIST-ON CONNECTORS, IN THE VARIOUS BOXES, GUTTERS, AND SIMILAR LOCATIONS, BUT NOT IN RACEWAYS. LEAVE SUFFICIENT SLACK TO PERMIT TWO (2) OR MORE SPLICES OR JOINTS TO BE REMADE IN CASE OF FAULT.
10. NM (ROMEX CABLE) WILL NOT BE ALLOWED ON THIS PROJECT.
11. ELECTRICAL CONTRACTOR SHALL RECEIVE, FROM SYSTEM SUPPLIERS, ALL WIRING DIAGRAMS FOR ALL EQUIPMENT, PRIOR TO ANY ROUGH-IN, TO ASSURE PROPER ELECTRICAL CHARACTERISTICS ARE PROVIDED. ELECTRICAL CONTRACTOR SHALL PROVIDE ARCHITECT WRITTEN NOTIFICATION PRIOR TO ROUGH-IN, THAT ALL WIRING DIAGRAMS HAVE BEEN RECEIVED AND REVIEWED FOR CORRECTNESS. ANY INCORRECT WIRING OR DEVICES INSTALLED BY ELECTRICAL CONTRACTOR WITHOUT WIRING DIAGRAMS SHALL BE CORRECTED AT ELECTRICAL CONTRACTOR'S EXPENSE.
12. ELECTRICAL CONTRACTOR SHALL RECEIVE, FROM MECHANICAL CONTRACTOR, ALL WIRING DIAGRAMS AND SHOP DRAWINGS FOR ALL MECHANICAL EQUIPMENT, PRIOR TO ANY ROUGH-IN, TO ASSURE PROPER ELECTRICAL CHARACTERISTICS, VOLTAGE, PHASE, HORSEPOWER, AMPERE, KILOWATTS AND ETC. ARE PROVIDED. ELECTRICAL CONTRACTOR SHALL PROVIDE ARCHITECT WRITTEN NOTIFICATION PRIOR TO ANY ROUGH-IN, THAT ALL WIRING DIAGRAMS AND SHOP DRAWINGS HAVE BEEN RECEIVED AND REVIEWED FOR CORRECTNESS. ANY INCORRECT WIRING OR DEVICES INSTALLED BY ELECTRICAL CONTRACTOR WITHOUT WIRING DIAGRAMS SHALL BE CORRECTED AT ELECTRICAL CONTRACTOR'S EXPENSE.
13. ELECTRICAL CONTRACTOR SHALL VISIT THE SITE PRIOR TO BIDDING TO DETERMINE EXACT DEMOLITION WORK TO BE DONE AND SHALL INCLUDE ALL DEMOLITION COSTS IN THEIR BID.
14. ELECTRICAL CONTRACTOR SHALL VERIFY FINAL LOCATIONS OF ALL SINKS WITH PLUMBING CONTRACTOR PRIOR TO ROUGH-IN. ANY ELECTRICAL DEVICES LOCATED ABOVE COUNTER AND BEHIND FINAL SINK LOCATIONS SHALL BE SHIFTED A MINIMUM OF 6" TO EITHER SIDE OF SINK. ANY ELECTRICAL DEVICES LEFT BEHIND SINK AT TIME OF FINAL ELECTRICAL OBSERVATION SHALL BE RELOCATED AT ELECTRICAL CONTRACTOR'S EXPENSE.
15. RELOCATIONS: OWNER RESERVES THE RIGHT TO RELOCATE ANY ELECTRICAL DEVICE, UP TO A DISTANCE OF 12'-0", BEFORE INSTALLATION WITHOUT EXTRA CHARGE FROM ELECTRICAL CONTRACTOR.
16. ELECTRICAL DRAWINGS ARE DIAGRAMMATIC ONLY. EXACT LOCATION OF ALL SYSTEMS AND EQUIPMENT SHALL BE FIELD VERIFIED AND COORDINATED WITH OTHER TRADES PRIOR TO ANY INSTALLATION. WHERE EXACT LOCATIONS ARE NECESSARY, THEY ARE DIMENSIONED ON THESE DRAWINGS. WHERE THERE IS A QUESTION OF ADEQUATE CLEARANCE OR COORDINATION BETWEEN TRADES, THIS CONTRACTOR SHALL PREPARE SHOP DRAWINGS FOR ENGINEER'S REVIEW. ON ALL SPECIAL SYSTEMS REQUIRING DRAWINGS BY LICENSED INSTALLATION CONTRACTORS, SUCH AS FIRE PROTECTION, SUCH DRAWINGS SHALL BE SUBMITTED WITHIN 30 DAYS AFTER AWARD OF CONTRACT.
17. CALL UTILITY COMPANIES (POWER, GAS, WATER, SEWER, TELEPHONE, CABLE TV, ETC.) IN ADVANCE BEFORE TRENCHING FOR THE MARKING OF THEIR UNDERGROUND UTILITIES. ALSO CONTRACTOR SHALL LOCATE ALL ON-SITE UTILITIES SUCH AS SECONDARY SERVICE FEEDERS, UNDERGROUND ELECTRICAL BRANCH CIRCUITS, SPRINKLER LINES, ETC. PRIOR TO TRENCHING. ANY CUT OR DAMAGED UNDERGROUND UTILITIES SHALL BE REPAIRED OR REPLACED AT CONTRACTOR'S EXPENSE.
18. EMT CONDUIT FITTINGS: DRY LOCATIONS ALL EMT COUPLERS AND CONNECTORS SHALL BE STEEL SET SCREW TYPE. DIE CAST FITTINGS SHALL NOT BE USED ON THIS PROJECT. DAMP/WET LOCATIONS, USE STEEL COMPRESSION GLAND TYPE COUPLER AND CONNECTORS.
19. ACCESS PANELS REQUIRED BY THE ELECTRICAL CONTRACTOR SHALL BE PROVIDED BY THE ELECTRICAL BID CONTRACTOR, THEN TURNED OVER TO THE APPROPRIATE TRADE FOR INSTALLATION. SEE ARCHITECTURAL SPECIFICATION SECTION DIVISION 8.
20. CONTRACTOR SHALL NOT FASTEN, ATTACH OR HANG ANY MATERIAL FROM THE ROOF DECK. ALL CONDUITS, JUNCTION BOXES, FIXTURES, DEVICES AND EQUIPMENT SHALL BE HUNG FROM THE STRUCTURAL STEEL FRAME AND SHALL BE PLACED WITH A MINIMUM OF 1" CLEARANCE BELOW THE ROOF DECK. WIRING AND CONDUITS SHALL NOT BE PLACED WITHIN THE RIBS OF THE ROOF DECK. CONTRACTOR SHALL NOT LOOSEN, REMOVE OR CUT ANY ROOFING SYSTEM FASTENERS PROTRUDING THROUGH THE ROOF DECK.

ELECTRICAL LEGEND

SYMBOL	DESCRIPTION
	MAIN DISTRIBUTION BOARD
	PANELBOARD
M	ELECTRIC SERVICE METER
CT	CURRENT TRANSFORMER
	NEW WORK UNDER THIS CONTRACT
	WORK DEMOLISHED UNDER THIS CONTRACT
	WORK EXISTING TO REMAIN UNDER THIS CONTRACT
	CONCEALED CIRCUIT
	UNDERGROUND/FLOOR CIRCUIT
	EXPOSED CIRCUIT
WM	WIREMOLD (SURFACE RACEWAY)
PM	PLUGMOLD (SURFACE RACEWAY)
P — 1,3,5	HOMERUN TO PANELBOARD (ONE ARROW / CIRCUIT, PANEL AND CIRCUIT #'S SHOWN)
	CONDUIT TURNS UP
	CONDUIT TURNS DOWN
J	JUNCTION BOX
	MOTOR (REFER TO MOTOR SCHEDULE)
	SAFETY DISCONNECT SWITCH (REFER TO MOTOR SCHEDULE)
	RECEPTACLE - DUPLEX
	RECEPTACLE - DUPLEX WITH ISOLATED GROUND
	RECEPTACLE - DUPLEX WITH GFCI PROTECTION
	RECEPTACLE - DUPLEX SPLIT WIRE
	RECEPTACLE - QUADRAPLEX (DOUBLE DUPLEX)
	RECEPTACLE - SPECIAL PURPOSE - SINGLE PHASE
	RECEPTACLE - SPECIAL PURPOSE - THREE PHASE
	RECEPTACLE - SINGLE OUTLET -
	RECEPTACLE - RANGE
	RECEPTACLE - DUPLEX - FLOOR MOUNTED

NOTE: NOT ALL SYMBOLS OR ABBREVIATIONS ON THIS LEGEND ARE NECESSARILY USED ON THIS PROJECT.

SYMBOL	DESCRIPTION
	SURFACE MOUNT 1x4 LUMINAIRE
	SURFACE MOUNT 2x4 LUMINAIRE
	SURFACE MOUNT 2x4 LUMINAIRE - UN-SWITCHED (NIGHT-LIGHT)
	SURFACE MOUNT ROUND LUMINAIRE
	SURFACE MOUNT STRIP LUMINAIRE
	WALL MOUNT STRIP LUMINAIRE
	RECESSED 2x4 LUMINAIRE
	RECESSED 2x4 LUMINAIRE - UN-SWITCHED (NIGHT-LIGHT)
	RECESSED 2x4 LUMINAIRE WITH EMERGENCY BATTERY BACK-UP
	RECESSED 2x2 LUMINAIRE
	RECESSED 2x2 LUMINAIRE WITH EMERGENCY BATTERY BACK-UP
	RECESSED ROUND LUMINAIRE
	RECESSED ROUND LUMINAIRE WITH EMERGENCY BATTERY BACK-UP
	PENDANT LUMINAIRE
	WALL MOUNTED LUMINAIRE
	POLE MOUNTED LUMINAIRE
	WALL MOUNTED EMERGENCY BATTERY BACK-UP
	CEILING MOUNTED EMERGENCY BATTERY BACK-UP
a	EXIT SIGN WITH DIRECTIONAL ARROWS HATCH INDICATES ILLUMINATED FACES, ARROWS INDICATE DIRECTIONS
$ F	SWITCH (TOGGLE UNLESS NOTED): x - SWITCH GROUP "x" M - MANUAL WITH THERMAL OVERLOAD 2 - 2 POLE p - PILOT LIGHT 3 - 3-WAY k - KEYED 4 - 4-WAY t - TIMER D - DIMMER F - FUSTAT VS - VACANCY SENSOR V - VARIABLE SPEED ROMAN NUMERAL (I,II,III, etc) INDICATES QUANTITY OF GANGED DEVICES UNDER COMMON FACEPLATE
OS	OS - OCCUPANCY SENSOR WITH MANUAL OVERRIDE

SYMBOL	DESCRIPTION
	DATA OUTLET - 3/4" CONDUIT TO ABOVE CEILING.
	TV - SATELLITE TV OUTLET. 1-5" CONDUIT TO ABOVE CEILING.
	HDMI - HDMI OUTLET. 1.5" CONDUIT TO ABOVE CEILING.
XX	MISCELLANEOUS SYSTEMS DEVICE DB - DOORBELL CH - CHIME CK - CARD READER / KEYPAD CR - CARD READER DA - DURESS ALARM DC - DOOR CONTACT DE - DELAYED EGRESS EL - ELECTRIC LOCK ES - ELECTRIC STRIKE IC - INTERCOM CALL STATION KP - KEYPAD MD - MOTION DETECTOR ML - MAGNETIC LOCK AMP - PA MIXER / AMPLIFIER MIC - MICROPHONE OUTLET SPK - PA SPEAKER HN - PA HORN, WEATHERPROOF

GENERAL ELECTRICAL ABBREVIATIONS

AC - ABOVE COUNTER
AFF - ABOVE FINISHED FLOOR
AFG - ABOVE FINISHED GRADE
BFC - BELOW FINISHED CEILING
BAS - BUILDING AUTOMATION SYSTEM
BLDG - BUILDING
BMS - BUILDING MANAGEMENT SYSTEM
BOF - BOTTOM OF FIXTURE
COF - COFFEE MAKER
CKT - CIRCUIT
CLG - CEILING
CO - CONDUIT ONLY
CWA - COORDINATE WITH ARCHITECT
CWM - COORDINATE WITH EQ SUPPLIER
DW - DISHWASHER
EF - EXHAUST FAN
EHD - ELECTRIC HAND DRYER
EM - EMERGENCY
EMS - ENERGY MANAGEMENT SYSTEM
EP - EXPLOSION PROOF
EWC - ELECTRIC WATER COOLER
EX - EXISTING
FRZ - FREEZER
FA - FIRE ALARM
FCP - FIRE ALARM CONTROL PANEL
GD - GARBAGE DISPOSAL
GND - GROUND
GFI - GROUND FAULT CIRCUIT INTERRUPTER
GFCI - GROUND FAULT CIRCUIT INTERRUPTER
HZL - HAZARDOUS LOCATION
IHW - INSTANT HOT WATER DISPENSER
JB - JUNCTION BOX
LGT(S) - LIGHT(S)
LV - LOW VOLTAGE
MAX - MAXIMUM
MGMT - MANAGEMENT
MIN - MINIMUM
MOP - MOTOR OPERATED PARITITION
MW - MICROWAVE
NC - NORMALLY CLOSED
NL - NIGHT LIGHT
NO - NORMALLY OPEN.
OVN - OVEN
PRJ - CEILING MOUNTED PROJECTOR
PS - ELECTRIC PROJECTOR SCREEN
PB - PULLBOX
RCPT(S) - RECEPTACLE(S)
RNG - RANGE
ST - SHUNT TRIP
SPD - SURGE PROTECTIVE DEVICE
REF - REFRIGERATOR
TV - TELEVISION
UNO - UNLESS NOTED OTHERWISE
UVR - UNDER-VOLTAGE RELEASE
UH - UNIT HEATER
VFD - VARIABLE FREQUENCY DRIVE
XFMR - TRANSFORMER
WP - WEATHERPROOF

INDEX OF ELECTRICAL DRAWINGS

SHEET	TITLE
E-00	SYMBOLS, NOTES AND SPECIFICATIONS
E-11	ELECTRICAL SITE PLAN
E-21	ELECTRICAL LIGHTING NEW WORK PLAN
E-22	ELECTRICAL POWER NEW WORK PLAN
E-23	ELECTRICAL SOUND SYSTEM NEW WORK PLAN
E-30	ELECTRICAL SCHEDULES
E-40	ELECTRICAL COMCHECK

CAIRN DESIGN LLC
leading high performance building solutions
1805 Sheely Drive
Fort Collins, CO 80526
voice: (970)-286-7968
cairndesignllc.com

COLORADO REGISTERED KENNETH R. CAIRN 48202 PROFESSIONAL ENGINEER

WORK NOTES: X

1. PROVIDE A 400A CT CABINET AND METER BASE PER UTILITY REQUIREMENTS.
2. PROVIDE COMPLETE GROUNDING SYSTEM PER NEC 250. INCLUDING, BUT NOT LIMITED TO THE COPPER GROUND ROD, BUILDING STEEL, CONCRETE ENCASED ELECTRODE, COLD WATER PIPE, ETC.

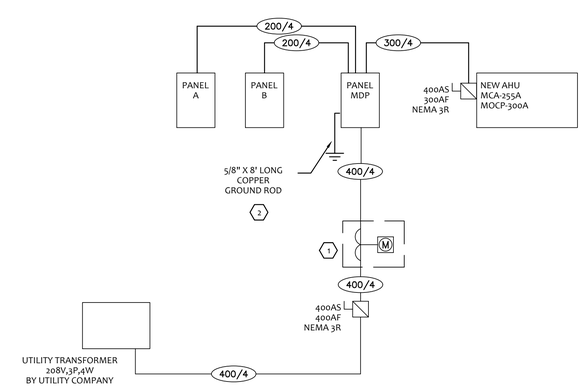

01 ONE-LINE DIAGRAM
NO SCALE

ELECTRICAL SPECIFICATIONS:

1. PROVIDE ALL EQUIPMENT AND SERVICES NECESSARY FOR COMPLETE SYSTEM.
2. EQUIPMENT AND MATERIALS SHALL BE UL-LISTED FOR THE USE INTENDED.
3. SUPPORT CONDUIT AND EQUIPMENT FROM THE STRUCTURE TO PREVENT SAGGING, POCKETING, AND VIBRATION.
4. FIRE-CAULK ALL PIPING PASSING THROUGH FIRE-RATED ASSEMBLIES.
5. PROVIDE COMPLETE SYSTEMS OF CONDUCTORS AND RACEWAYS USING CONDUIT AND/OR CABLE ASSEMBLIES APPROPRIATE TO THE FUNCTION AND LOCATION AND APPROVED PER NEC REQUIREMENTS. CONDUCTORS MUST BE DERATED PER CODE.
6. PROVIDE A COMPLETE GROUNDING SYSTEM PER NEC, SECTION 250.
7. RACEWAYS MAY BE THE FOLLOWING (SUBJECT TO NEC REQUIREMENTS): ELECTRICAL METALLIC TUBING, GALVANIZED.
8. PROVIDE GALVANIZED STEEL JUNCTION AND OUTLET BOXES, EXCEPT AS INDICATED OTHERWISE. PROVIDE WEATHER-PROOF TYPE CAST BOXES WITH GASKET AND CAST COVERPLATE FOR WET LOCATIONS. THROUGH THE WALL BOXES ARE NOT PERMITTED.
9. POWER CONDUCTORS SHALL BE COPPER, (STRANDED FOR NO. 8 AWG AND LARGER), WITH THE FOLLOWING INSULATION STANDARDS: THHN, THWN, XHHW (90C). THE CONDUCTORS SHALL BE APPLIED USING THE 75C RATING.
10. PROVIDE SPECIFICATION GRADE, IVORY COLORED DEVICES THROUGHOUT, UNLESS NOTED OTHERWISE ON THE PLANS. DEVICES SHALL BE HUBBELL. PLATES SHALL BE IVORY PLASTIC, WITH MATCHING SCREWS, UNLESS NOTED OTHERWISE. PROVIDE BLANK COVERPLATES FOR UNUSED OUTLETS. COVERPLATES FOR MULTI-GANG BOXES SHALL BE SIZED FOR THE BOX T COVERS.
11. BRANCH CIRCUITS SHALL USE MINIMUM NO. 12 AWG WIRING. CONTROL WIRING MINIMUM NO. 14 AWG. FOR DISTANCES EXCEEDING 75' FROM THE PANEL, PROVIDE MIN. 10 AWG.
12. ALL CONDUIT AND DEVICES SHALL BE SURFACE MOUNTED. REFER TO PLAN AND PLAN NOTES.
13. RUN ALL CONDUIT PARALLEL AND PERPENDICULAR TO BUILDING LINES.
14. USE FLEXIBLE METALLIC CONDUIT FOR CONNECTIONS TO MOTORS, FIXTURES, OR OTHER EQUIPMENT WHERE VIBRATION IS PRESENT. PROVIDE SEALTITE FMC IN WET AREAS.
15. PROVIDE GROUND WIRE IN NON-METALLIC CONDUIT AND FLEXIBLE CONDUIT. GROUND WIRES SHALL BE INCREASED IN SIZE WHERE CIRCUIT WIRING IS INCREASED FOR VOLTAGE DROP.
16. PROVIDE A TYPED PANEL SCHEDULE FOR EACH PANEL, INSERTED IN A PLASTIC SLEEVE.

FIRE ALARM SYSTEM

THE FIRE ALARM SYSTEM SHALL BE DESIGN–BUILD BY DIVISION 22 FIRE ALARM VENDOR.

INITIATION AND NOTIFICATION DEVICES SHOWN ON THE PLANS ARE CONCEPTUAL ONLY AND SHOULD NOT BE USED FOR BID. ACTUAL DEVICE QUANTITIES AND LOCATIONS SHALL BE DETERMINED BY THE FIRE ALARM VENDOR. NO CHANGE ORDERS SHALL BE ALLOWED FOR ADDITIONAL DEVICES NOT SHOWN ON THE PLANS.

THE FIRE ALARM SYSTEM SHALL COMPLY WITH ALL REQUIREMENTS OF IFC, IBC, NFPA, AND THE LOCAL FIRE DEPARTMENT.

PROJECT:
LOGAN COUNTY COMMUNITY CENTER ADDITION

SHEET TITLE:
ELECTRICAL SYMBOLS AND SPECIFICATIONS

ISSUE DATE:
BID/PERMIT
12/16/2022

REVISIONS:

PROJECT NO.:
2208

SHEET NO.
E-00

As instruments of service, these drawings and the design represented are the permanent property of Cairn Design, LLC. Reproduction or use of these drawings other than for the project intended, without written consent from the Designer, is prohibited. Unauthorized use will be subject to legal action.

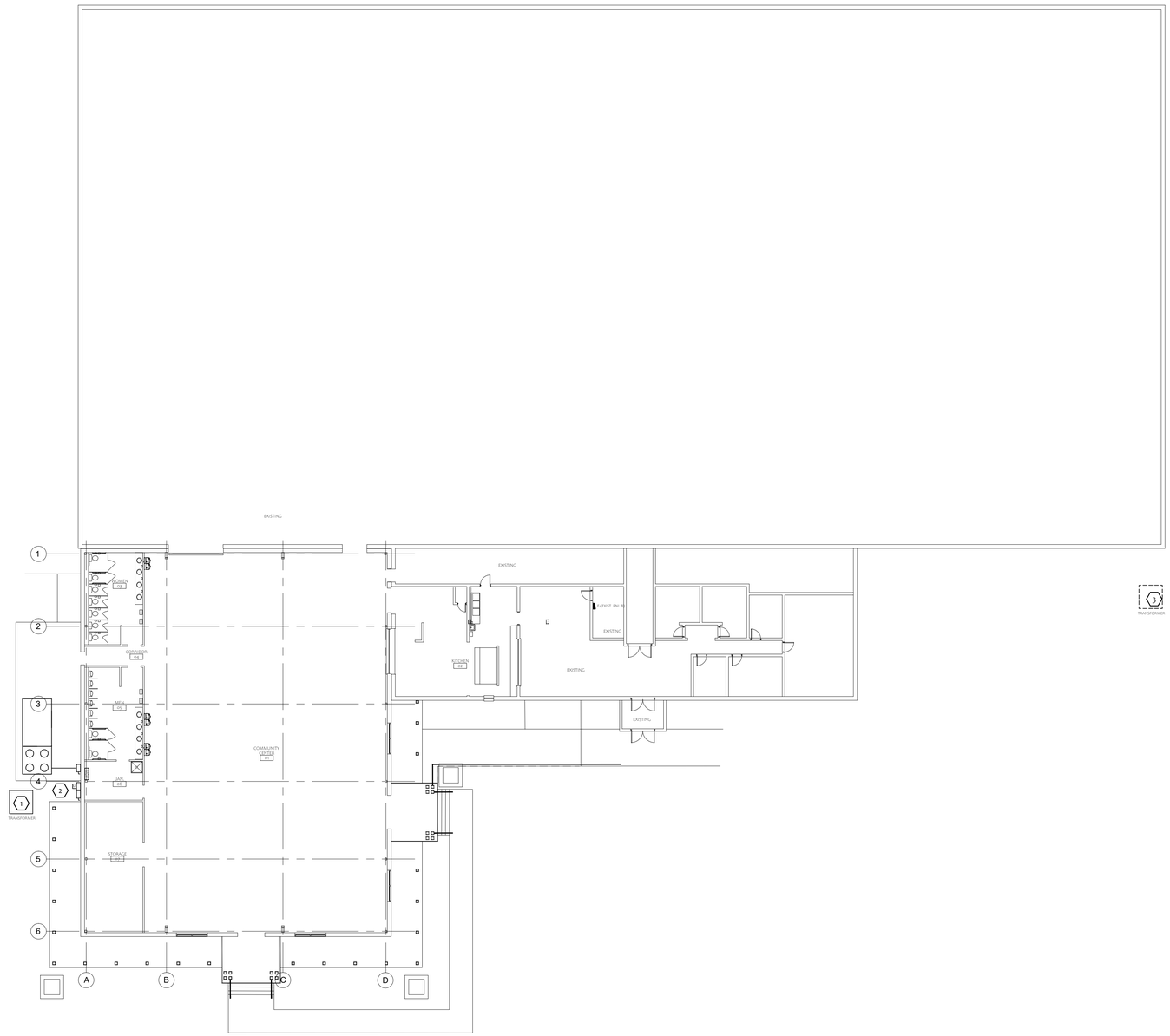

GENERAL NOTES:

1. COORDINATE WITH SITE LAYOUT PLAN AND CIVIL DRAWINGS.

WORK NOTES:

1. NEW PAD MOUNTED TRANSFORMER BY UTILITY. CONTRACTOR SHALL FOLLOW UTILITY STANDARDS FOR CONSTRUCTION.
2. ELECTRICAL METER. COORDINATE EXACT REQUIREMENTS WITH UTILITY.
3. EXISTING PAD MOUNTED TRANSFORMER. COORDINATE PRIMARY CONNECTION WITH UTILITY.

01 SITE ELECTRICAL NEW WORK PLAN
SCALE: 1/16" = 1'-0"

CAIRN DESIGN LLC
leading high performance building solutions

1805 Sheely Drive
Fort Collins, CO 80526

voice: (970)-286-7968

cairndesignllc.com

COLORADO REGISTERED
KENNETH R. CLUDER
48202
PROFESSIONAL ENGINEER

PROJECT:

LOGAN COUNTY
COMMUNITY CENTER
ADDITION

SHEET TITLE:

ELECTRICAL
SITE PLAN
NEW WORK

ISSUE DATE:

BID/PERMIT
12/16/2022

REVISIONS:

PROJECT NO.:
2208

SHEET NO.

E-11

As instruments of service, these drawings and the design represented are the permanent property of Cairn Design, LLC. Reproduction or use of these drawings other than for the project intended, without written consent from the Designer, is prohibited. Unauthorized use will be subject to legal action.

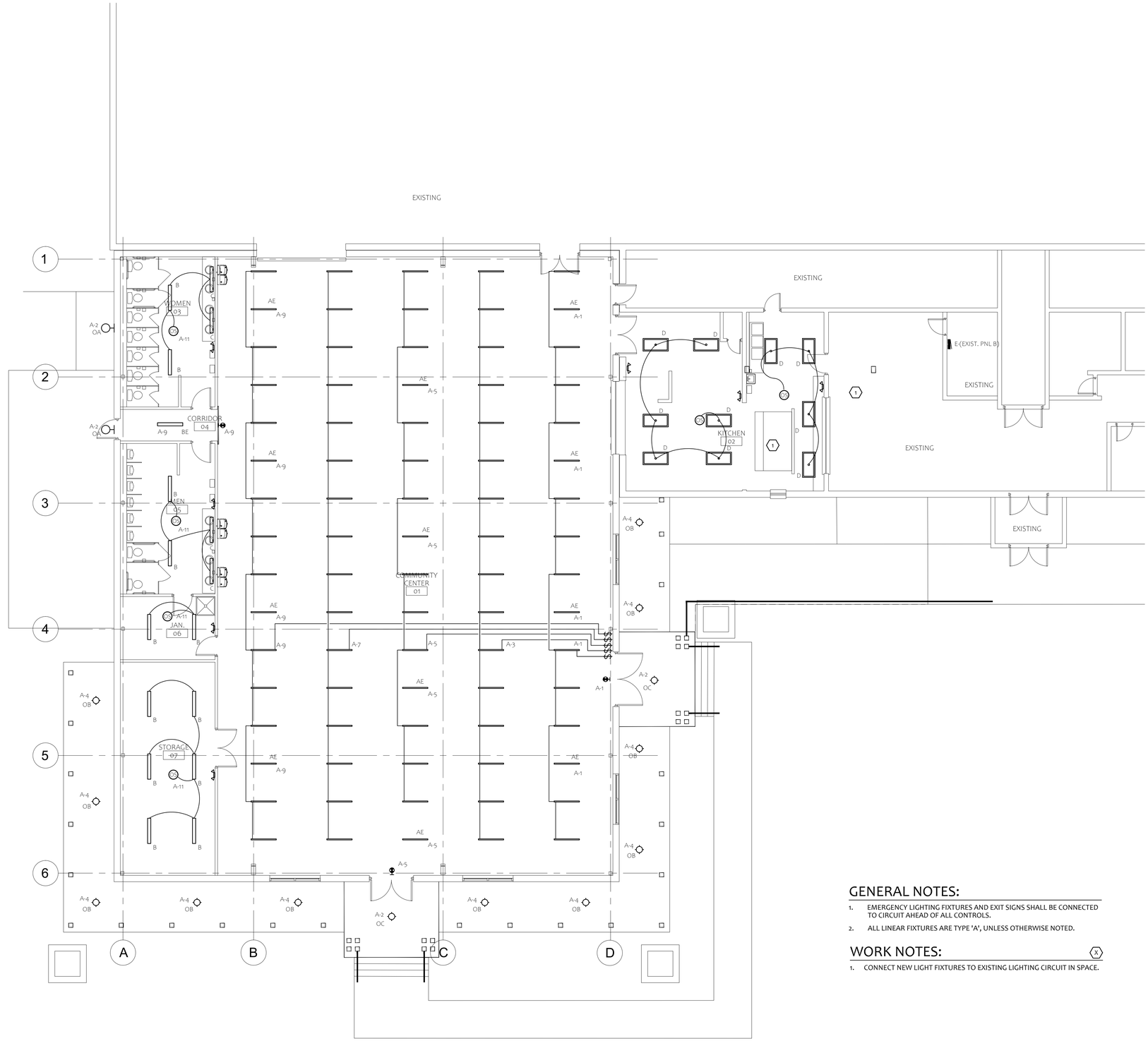

GENERAL NOTES:

1. EMERGENCY LIGHTING FIXTURES AND EXIT SIGNS SHALL BE CONNECTED TO CIRCUIT AHEAD OF ALL CONTROLS.
2. ALL LINEAR FIXTURES ARE TYPE 'A', UNLESS OTHERWISE NOTED.

WORK NOTES:

1. CONNECT NEW LIGHT FIXTURES TO EXISTING LIGHTING CIRCUIT IN SPACE.

01 LIGHTING NEW WORK PLAN
SCALE: 1/8" = 1'-0"

CAIRN DESIGN LLC
leading high performance building solutions

1805 Sheely Drive
Fort Collins, CO 80526

voice: (970)-286-7968

cairndesignllc.com

COLORADO REGISTERED
KENNETH A. CAIRNS
48202
PROFESSIONAL ENGINEER

PROJECT:

LOGAN COUNTY
COMMUNITY CENTER
ADDITION

SHEET TITLE:

ELECTRICAL
LIGHTING
NEW WORK PLAN

ISSUE DATE:

BID/PERMIT
12/16/2022

REVISIONS:

PROJECT NO.:
2208

SHEET NO.

E-21

As instruments of service, these drawings and the design represented are the permanent property of Cairn Design, LLC. Reproduction or use of these drawings other than for the project intended, without written consent from the Designer, is prohibited. Unauthorized use will be subject to legal action.

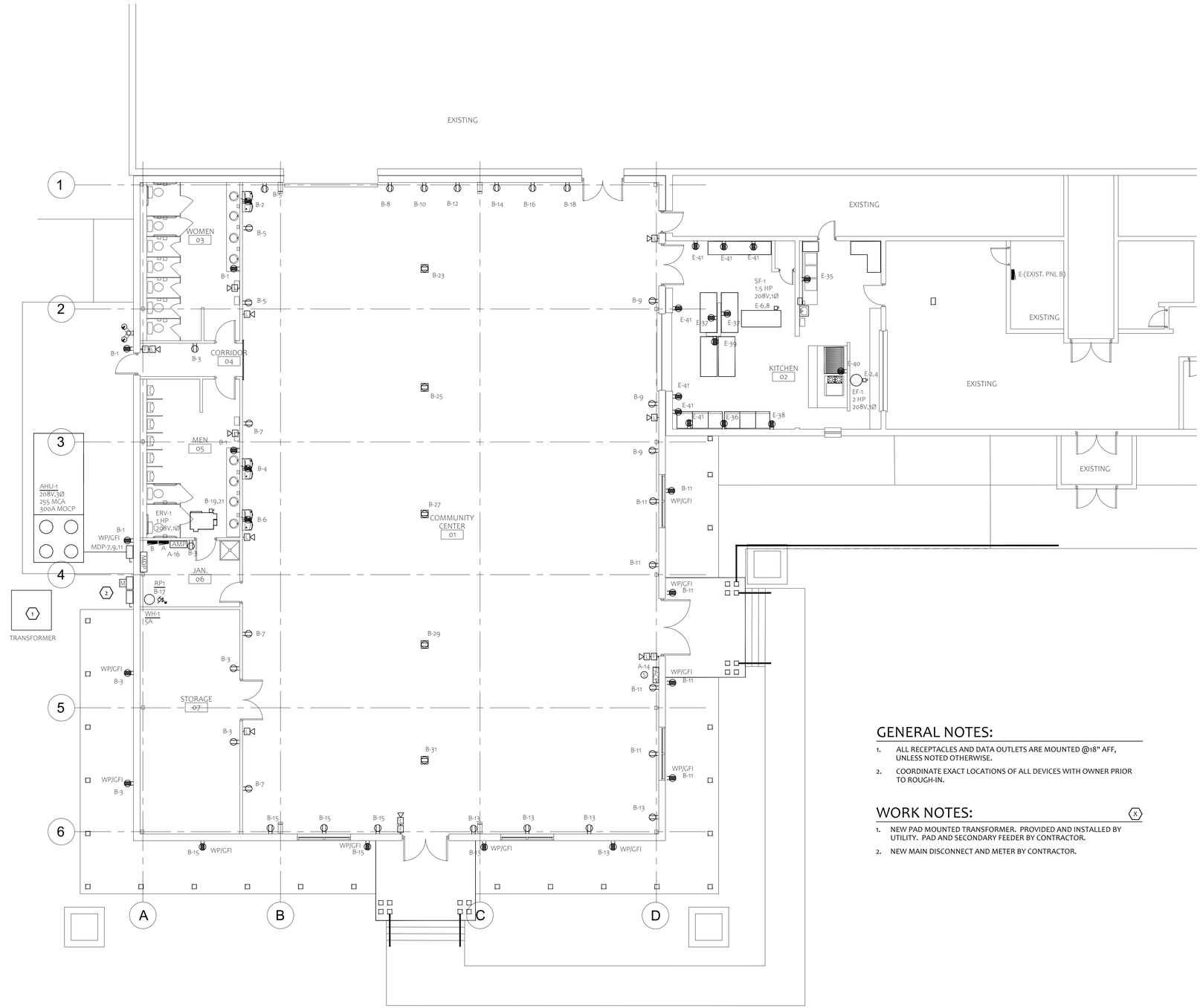

CAIRN DESIGN LLC
leading high performance building solutions

1805 Sheely Drive
Fort Collins, CO 80526

voice: (970)-286-7968

cairndesignllc.com

COLORADO REGISTERED PROFESSIONAL ENGINEER
48202

GENERAL NOTES:

1. ALL RECEPTACLES AND DATA OUTLETS ARE MOUNTED @18" AFF, UNLESS NOTED OTHERWISE.
2. COORDINATE EXACT LOCATIONS OF ALL DEVICES WITH OWNER PRIOR TO ROUGH-IN.

WORK NOTES:

1. NEW PAD MOUNTED TRANSFORMER. PROVIDED AND INSTALLED BY UTILITY. PAD AND SECONDARY FEEDER BY CONTRACTOR.
2. NEW MAIN DISCONNECT AND METER BY CONTRACTOR.

01 POWER NEW WORK PLAN
SCALE: 1/8" = 1'-0"

PROJECT:

LOGAN COUNTY
COMMUNITY CENTER
ADDITION

SHEET TITLE:

ELECTRICAL
POWER AND DATA
NEW WORK PLAN

ISSUE DATE:

BID/PERMIT
12/16/2022

REVISIONS:

PROJECT NO.:

2208

SHEET NO.

E-22

As instruments of service, these drawings and the design represented are the permanent property of Cairn Design, LLC. Reproduction or use of these drawings other than for the project intended, without written consent from the Designer, is prohibited. Unauthorized use will be subject to legal action.

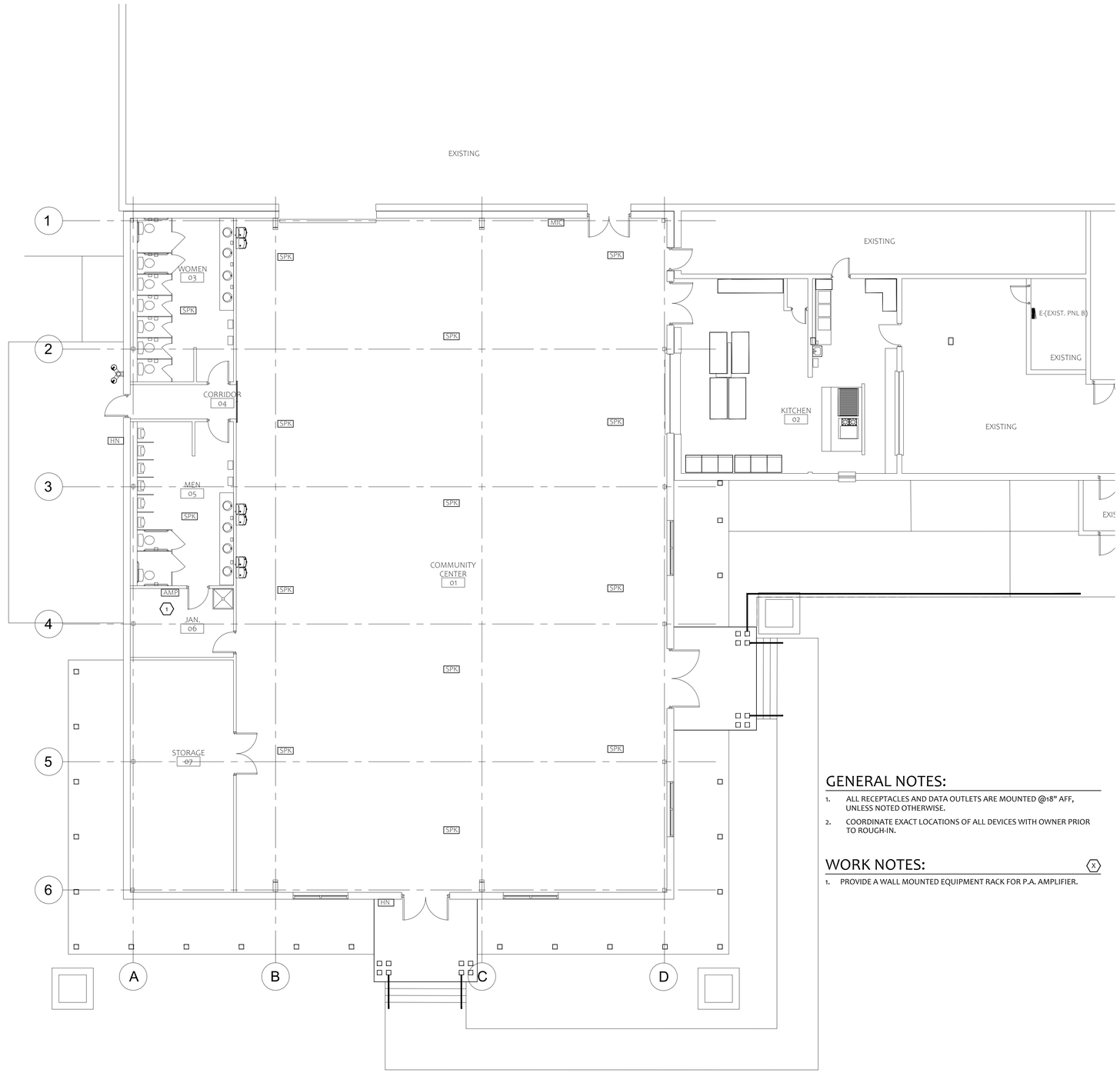

WORK NOTES:

1. PA SYSTEM MIXER / AMPLIFIER. PROVIDE WALL MOUNTED RACK. MIXER / AMPLIFIER SHALL BE BLUETOOTH COMPATIBLE AND HAVE 2 MICROPHONE INPUTS AND 3 AUX INPUTS. AMPLIFIER SHALL BE 240W MINIMUM WITH TWO SPEAKER OUTPUTS. EACH OUTPUT SHALL HAVE INDIVIDUAL VOLUME CONTROLS. AMPLIFIER SHALL HAVE BUILT-IN FM TUNER. PROVIDE EXTERNAL FM ANTENNA.
2. PROVIDE EXTERNAL GROUND TO BUILDING STEEL. BOND TO RACK AND AMPLIFIER.
3. ENCLOSED PENDANT MOUNTED SPEAKERS. 25W RMS, 70W PEAK, 65Hz-20kHz, 8ohm. PEAK OUTPUT 100dB, 5" DIA.
4. RECESSED CEILING MOUNTED SPEAKERS. 8 OHMS, BUILT-IN TRANSFORMER, 3" DIAMETER.
5. PROVIDE SPEAKER WIRE, MICROPHONE WIRE AND INPUT CABLES AS REQUIRED. PROVIDE PER MANUFACTURER.

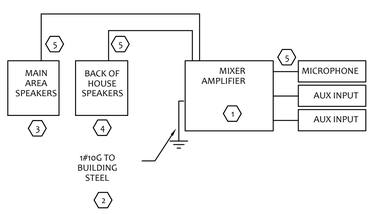

02 SOUND SYSTEM DIAGRAM
NO SCALE

GENERAL NOTES:

1. ALL RECEPTACLES AND DATA OUTLETS ARE MOUNTED @18" AFF, UNLESS NOTED OTHERWISE.
2. COORDINATE EXACT LOCATIONS OF ALL DEVICES WITH OWNER PRIOR TO ROUGH-IN.

WORK NOTES:

1. PROVIDE A WALL MOUNTED EQUIPMENT RACK FOR P.A. AMPLIFIER.

01 POWER NEW WORK PLAN
SCALE: 1/8" = 1'-0"

CAIRN DESIGN LLC
leading high performance building solutions
1805 Sheely Drive
Fort Collins, CO 80526
voice: (970)-286-7968
cairndesignllc.com

COLORADO REGISTERED
KENNETH R. HAUPT
48202
PROFESSIONAL ENGINEER

PROJECT:
LOGAN COUNTY
COMMUNITY CENTER
ADDITION

SHEET TITLE:
ELECTRICAL
SOUND SYSTEM
NEW WORK PLAN

ISSUE DATE:
BID/PERMIT
12/16/2022

REVISIONS:

PROJECT NO.:
2208

SHEET NO.
E-23

As instruments of service, these drawings and the design represented are the permanent property of Cairn Design, LLC. Reproduction or use of these drawings other than for the project intended, without written consent from the Designer, is prohibited. Unauthorized use will be subject to legal action.

PANEL A

Location : ELEC
Supply From : MDP
Mounting : SURFACE — NEMA : 1
Voltage Line-Line : 120 — Phase : 3
Voltage Line-Ground : 208 — Wires : 4
A.I.C Rating (A) : 22000 — Main Rating (A) : 200
Main Type : MCB — MCB Rating (A) : 200A

Notes :
1. PROVIDE HANDLE LOCK-ON DEVICE.
2. VIA TIMECLOCK SET FOR BUSINESS HOURS.
3. VIA PE/TIMECLOCK SET FOR DUSK TO DAWN
4.
5.
6.

Notes	LOAD DESCRIPTION	SIZE (A)	POLES	CKT No	VOLT-AMPS PER PHASE A		VOLT-AMPS PER PHASE B		VOLT-AMPS PER PHASE C		CKT No	SIZE (A)	POLES	LOAD DESCRIPTION	Notes
2	LIGHTING	20	1	1	900	30					2	20	1	EXTERIOR LIGHTING	
2	LIGHTING	20	1	3			900	165			4	20	1	EXTERIOR LIGHTING	3
2	LIGHTING	20	1	5					900	0	6	20	1	SPARE	
2	LIGHTING	20	1	7	900	0					8	20	1	SPARE	
2	LIGHTING	20	1	9			900	0			10	20	1	SPARE	
	LIGHTING	20	1	11					837	0	12	20	1	SPARE	
	SPARE	20	1	13	0	600					14	20	1	FACP	1
	SPARE	20	1	15			0	500			16	20	1	SOUND SYSTEM	
	SPARE	20	1	17					0	0	18	20	1	SPARE	
	SPARE	20	1	19	0	0					20	20	1	SPARE	
	SPARE	20	1	21			0	0			22	20	1	SPARE	
	SPARE	20	1	23					0	0	24	20	1	SPARE	
	SPARE	20	1	25	0	0					26	20	1	SPARE	
	SPARE	20	1	27			0	0			28	20	1	SPARE	
	SPARE	20	1	29					0	0	30	20	1	SPARE	
	SPARE	20	1	31	0	0					32	20	1	SPARE	
	SPARE	20	1	33			0	0			34	20	1	SPARE	
	SPARE	20	1	35					0	0	36	20	1	SPARE	
	SPARE	20	1	37	0	0					38	20	1	SPARE	
	SPARE	20	1	39			0	0			40	20	1	SPARE	
	SPARE	20	1	41					0	0	42	20	1	SPARE	
	SPARE	20	1	43	0	0					44	20	1	SPARE	
	SPARE	20	1	45			0	0			46	20	1	SPARE	
	SPARE	20	1	47					0	0	48	20	1	SPARE	
	SPARE	20	1	49	0	0					50	20	1	SPARE	
	SPARE	20	1	51			0	0			52	20	1	SPARE	
	SPARE	20	1	53					0	0	54	20	1	SPARE	
	Connected load per phase				2,430		2,465		1,737						

	Total Load	Demand		Calculated Load
Lighting load	5,532	x	1.25	6,915 VA
Receptacle load (10 kVA or less)	195	x	1.00	195 VA
Receptacle load over 10 kVA	0	x	0.50	0 VA
Largest motor	0	x	1.25	0 VA
Other motors	0	x	1.00	0 VA
Electric heat	0	x	1.25	0 VA
Other	1,100	x	1.00	1,100 VA
Fut1	0	x	0.37	0 VA
Fut2	0	x	0.37	0 VA
Fut3	0	x	0.37	0 VA
Total calculated load				8,210 VA
Minimum Panel Ampacity				23 Amps

PANEL B

Location : ELEC
Supply From : MDP
Mounting : SURFACE — NEMA : 1
Voltage Line-Line : 120 — Phase : 3
Voltage Line-Ground : 208 — Wires : 4
A.I.C Rating (A) : 22000 — Main Rating (A) : 225A
Main Type : MLO — MCB Rating (A) : N/A

Notes :
1.
2.
3.
4.
5.
6.

Notes	LOAD DESCRIPTION	SIZE (A)	POLES	CKT No	VOLT-AMPS PER PHASE A		VOLT-AMPS PER PHASE B		VOLT-AMPS PER PHASE C		CKT No	SIZE (A)	POLES	LOAD DESCRIPTION	Notes
	RESTROOM RCPTS	20	1	1	1200	500					2	20	1	EWC	
	COMMON RCPTS	20	1	3			1200	500			4	20	1	EWC	
	MAIN AREA RCPTS	20	1	5					1200	500	6	20	1	STAGE RCPTS	
	MAIN AREA RCPTS	20	1	7	1200	1200					8	20	1	STAGE RCPTS	
	MAIN AREA RCPTS	20	1	9			1200	1200			10	20	1	STAGE RCPTS	
	MAIN AREA RCPTS	20	1	11					1200	1200	12	20	1	STAGE RCPTS	
	MAIN AREA RCPTS	20	1	13	1200	1200					14	20	1	STAGE RCPTS	
	MAIN AREA RCPTS	20	1	15			1200	1200			16	20	1	STAGE RCPTS	
	RECIRC / WH	20	1	17					1200	1200	18	20	1	STAGE RCPTS	
	ERV-1	20	2	19	800	0					20	20	1	SPARE	
		20		21			800	0			22	20	1	SPARE	
	FLOOR OUTLET	20	1	23					1200	0	24	20	1	SPARE	
	FLOOR OUTLET	20	1	25	1200	0					26	20	1	SPARE	
	FLOOR OUTLET	20	1	27			1200	0			28	20	1	SPARE	
	FLOOR OUTLET	20	1	29					1200	0	30	20	1	SPARE	
	FLOOR OUTLET	20	1	31	1200	0					32	20	1	SPARE	
	SPARE	20	1	33			0	0			34	20	1	SPARE	
	SPARE	20	1	35					0	0	36	20	1	SPARE	
	SPARE	20	1	37	0	0					38	20	1	SPARE	
	SPARE	20	1	39			0	0			40	20	1	SPARE	
	SPARE	20	1	41					0	0	42	20	1	SPARE	
	Connected load per phase				9,700		8,500		8,900						

	Total Load	Demand		Calculated Load
Lighting load	0	x	1.25	0 VA
Receptacle load (10 kVA or less)	10,000	x	1.00	10,000 VA
Receptacle load over 10 kVA	10,400	x	0.50	5,200 VA
Largest motor	1,600	x	1.25	2,000 VA
Other motors	0	x	1.00	0 VA
Electric heat	0	x	1.25	0 VA
Other	0	x	1.00	0 VA
Fut1	0	x	0.37	0 VA
Fut2	0	x	0.37	0 VA
Fut3	0	x	0.37	0 VA
Total calculated load				17,200 VA
Minimum Panel Ampacity				48 Amps

E – EXIST PANEL B (SQ.D)

Location : ELEC
Supply From : MDP
Mounting : SURFACE — NEMA : 1
Voltage Line-Line : 120 — Phase : 3
Voltage Line-Ground : 208 — Wires : 4
A.I.C Rating (A) : 10000 — Main Rating (A) : 225A
Main Type : MLO — MCB Rating (A) : N/A

Notes :
1. PROVIDE SHUNT-TRIP BREAKER
2. NEW BREAKER IN SPACE NOTED
3. REMOVE / REPLACE EXISTING BREAKER.
4. BECOMES SPARE. LEAVE CONNECTED.
5.
6.

Notes	LOAD DESCRIPTION	SIZE (A)	POLES	CKT No	VOLT-AMPS PER PHASE A		VOLT-AMPS PER PHASE B		VOLT-AMPS PER PHASE C		CKT No	SIZE (A)	POLES	LOAD DESCRIPTION	Notes
		40		1	3600	2000					2	30	2	EXHAUST FAN	3
	A/C COMPRESSOR	40	3	3			3600	2000			4	30			
		40		5					3600	1500	6	20	2	MUA UNIT	3
		40		7	3600	1500					8	20			
	A/C COMPRESSOR	40	3	9			3600	0			10	20	1	DISPOSAL	4
		40		11					3600	1200	12	20	1	RECEPTACLES	
	ROOM 114	20	1	13	1200	1200					14	20	1	RECEPTACLES	
	LIGHTING	20	1	15			650	1200			16	20	1	RECEPTACLES	
	RECEPTACLES	20	1	17					1200	500	18	20	1	LIGHITNG	
	RECEPTACLES	20	1	19	1200	500					20	20	1	LIGHITNG	
	RECEPTACLES	20	1	21			1200	500			22	20	1	LIGHITNG	
	RECEPTACLES	20	1	23					1200	500	24	20	1	LIGHITNG	
	RECEPTACLES	20	1	25	1200	500					26	20	1	LIGHITNG	
	FURNACE	20	1	27			800	500			28	20	1	LIGHITNG	
	FURNACE	20	1	29					800	500	30	20	1	LIGHITNG	
	KITCHEN	20	1	31	1200	500					32	20	1	LIGHITNG	
	KITCHEN	20	1	33			1200	500			34	20	1	LIGHITNG	
2	KITCHEN	20	1	35					1200	1200	36	20	1	KITCHEN	2
2	KITCHEN	20	1	37	1200	1200					38	20	1	KITCHEN	2
2	KITCHEN	20	1	39			1200	1200			40	20	1	KITCHEN	1,2
2	KITCHEN	20	1	41					1200	0	42	20	1	SPARE	
	Connected load per phase				20,600		18,150		18,200						

	Total Load	Demand		Calculated Load
Lighting load	5,150	x	1.25	6,438 VA
Receptacle load (10 kVA or less)	10,000	x	1.00	10,000 VA
Receptacle load over 10 kVA	11,400	x	0.50	5,700 VA
Largest motor	10,800	x	1.25	13,500 VA
Other motors	19,400	x	1.00	19,400 VA
Electric heat	0	x	1.25	0 VA
Other	0	x	1.00	0 VA
Fut1	0	x	0.37	0 VA
Fut2	0	x	0.37	0 VA
Fut3	0	x	0.37	0 VA
Total calculated load				55,038 VA
Minimum Panel Ampacity				153 Amps

PANEL MDP

Location : ELEC
Supply From : XFMR
Mounting : SURFACE — NEMA : 1
Voltage Line-Line : 120 — Phase : 3
Voltage Line-Ground : 208 — Wires : 4
A.I.C Rating (A) : 22000 — Main Rating (A) : 400
Main Type : MLO — MCB Rating (A) : N/A

Notes :
1. S.E. RATED
2.
3.
4.
5.
6.

Notes	LOAD DESCRIPTION	SIZE (A)	POLES	CKT No	VOLT-AMPS PER PHASE A		VOLT-AMPS PER PHASE B		VOLT-AMPS PER PHASE C		CKT No	SIZE (A)	POLES	LOAD DESCRIPTION	Notes
		200		1	2430	9700					2	200			
	PANEL A	200	3	3			2465	8500			4	200	3	EXTERIOR LIGHTING	2
		200		5					1737	8900	6	200			
		300		7	21420	0					8				
	AHU-1	300	3	9			21420	0			10		3	SPACE ONLY	
		300		11					21420	0	12				
				13	0	0					14				
	SPACE ONLY		3	15			0	0			16		3	SPACE ONLY	
				17					0	0	18				
	Connected load per phase				33,550		32,385		32,057						

	Total Load	Demand		Calculated Load
Lighting load	0	x	1.25	0 VA
Receptacle load (10 kVA or less)	0	x	1.00	0 VA
Receptacle load over 10 kVA	0	x	0.50	0 VA
Largest motor	64,260	x	1.25	80,325 VA
Other motors	0	x	1.00	0 VA
Electric heat	0	x	1.25	0 VA
Other	33,732	x	1.00	33,732 VA
Fut1	0	x	0.37	0 VA
Fut2	0	x	0.37	0 VA
Fut3	0	x	0.37	0 VA
Total calculated load				114,057 VA
Minimum Panel Ampacity				317 Amps

LUMINAIRE SCHEDULE

TAG	DESCRIPTION	INSTALLATION METHOD	DEPTH [IN]	LAMP SPEC	LAMP QTY	BALLAST/DRIVER SPEC	BALLAST/DRIVER QTY	VOLTAGE	INPUT WATTS	FEATURES / OPTIONS	REFERENCED PRODUCTS	NOTES
A	PENDANT MOUNTED LED	PENDANT	16	5500 LUMEN	1		1	MVOLT	56	0-10V DIMMING	COOPER NEORAY DEFINE 2 16" HIGH SA216 DP C 865D 80 35 C4 JB B 48 U DD D B S2 A2	
AE	SAME AS TYPE A WITH BATTERY	PENDANT									COOPER NEORAY DEFINE 2 16" HIGH SA216 DP C 865D 80 35 C4 JB B 48 1 B3 U DD D B S2 A2	
B	LED STRIP	SURFACE	4	4589 LUMEN				120V	39		METALUX 4SNLED-LD544SLLWUNVL835CD1	
BE	SAME AS TYPE B WITH BATTERY	SURFACE									METALUX 4SNLED-LD544SLLWUNVEL7W L835CD1	
C	MIRROR LIGHT	WALL MOUNT	4.5	900 LUMEN			1	120V	10		METALUX 4BCLEDLD48SLFUNVL835	
D	2X4 TROFFER	GRID	3.25	3884 LUMEN			1	120V	29		COOPER METALUX 24GRLED1382X4RT	
DE	SAME AS TYPE D WITH BATTERY	GRID									COOPER METALUX 24GRLED1382X4RT EBPLED14W	
OA	WALL MOUNTED FIXTURE	WALL MOUNT		2239 LUMEN				120V	32		LUMARK LDWP FC 4B ED750-EMLED-CD	I
OB	DECORATIVE LED PENDANT	PENDANT		TBD				120V	15 MAX			
OC	DECORATIVE LED PENDANT	PENDANT		TBD				120V	15 MAX			
E1	EMERGENCY LIGHT	WALL/CLG MOUNT		LED	2		1	MVOLT	6	WHITE HOUSING	COOPER LP SERIES – SEL 50	H
EX	EXIT LIGHT	UNIVERSAL		LED	1		1	MVOLT	5	BLACK EXIT WITH RED PANEL	COOPER LP SERIES	H

NOTES
A. REFERENCED PRODUCTS ARE INCLUDED HEREIN OF MANUFACTURERS PRODUCTS THAT GENERALLY CONFORM TO THE LUMINAIRE DESIGN INTENTS ESTABLISHED HEREIN AND IN THE PRODUCT MANUAL. EQUIVALENT PRODUCT BY OTHER MANUFACTURERS MAY BE CONSIDERED PRIOR TO BID.
B. DETERMINE SPECIFIC PRODUCT NUMBERS BASED ON REFERENCED PRODUCT SERIES, WRITTEN DESCRIPTIONS, AND PROJECT MANUAL SPECIFICATIONS WHERE APPLICABLE.
C. COORDINATE FINAL FINISH AND REFLECTOR COLORS WITH ARCHITECT PRIOR TO PLACING ORDER.
D. LAMP COLORS SHALL BE 3,500K THROUGHOUT INTERIOR AND EXTERIOR SPACES.
E. ALERT ARCHITECT AND ELECTRICAL ENGINEER OF DISCREPANCIES PRIOR TO BID.
F. PROVIDED BY COOLER SUPPLIER. INSTALLED BY ELECTRICAL CONTRACTOR. COORDINATE LOCATIONS ON SITE.
G. PROVIDE POWER SUPPLY FOR LED STRIP. MOUNT POWER SUPPLY IN REGISTER AREA MILLWORK.
H. COMBO UNITS MAY BE PROVIDED WHERE MOUNTED ADJACENT TO EACH OTHER.
I. PROVIDE UNSWITCHED CIRCUIT FOR EMERGENCY BATTERY.

CAIRN DESIGN LLC
leading high performance building solutions
1805 Sheely Drive
Fort Collins, CO 80526
voice: (970)-286-7968
cairndesignllc.com

COLORADO REGISTERED PROFESSIONAL ENGINEER
48202

PROJECT:
LOGAN COUNTY COMMUNITY CENTER ADDITION

SHEET TITLE:
ELECTRICAL SCHEDULES

ISSUE DATE:
BID/PERMIT
12/16/2022

REVISIONS:

PROJECT NO.:
2208

SHEET NO.
E-30

As instruments of service, these drawings and the design represented are the permanent property of Cairn Design, LLC. Reproduction or use of these drawings other than for the project intended, without written consent from the Designer, is prohibited. Unauthorized use will be subject to legal action.

COM*check* Software Version 4.1.1.0

Interior Lighting Compliance Certificate

Section 1: Project Information

Energy Code: **2009 IECC**
Project Title: LOGAN COUNTY COMMUNITY CENTER
Project Type: New Construction

Construction Site:
LOGAN COUNTY FAIRGROUNDS
STERLING, CO, CO

Owner/Agent:
LOGAN COUNTY
STERLING, CO, CO

Designer/Contractor:
CAIRN DESIGN, LLC
FORT COLLINS, CO, CO

Section 2: Interior Lighting and Power Calculation

A Area Category	B Floor Area (ft2)	C Allowed Watts / ft2	D Allowed Watts (B x C)
COMMUNITY CENTER (Convention Center)	8000	1.2	9600
		Total Allowed Watts =	9600

Section 3: Interior Lighting Fixture Schedule

A Fixture ID : Description / Lamp / Wattage Per Lamp / Ballast	B Lamps/ Fixture	C \# of Fixtures	D Fixture Watt.	E (C X D)
COMMUNITY CENTER (Convention Center 8000 sq.ft.)				
LED 1: A: LED Other Fixture Unit 50W:	1	80	56	4480
LED 2: B: LED Other Fixture Unit 40W:	1	13	39	507
LED 3: C: LED Linear 10W:	1	4	10	40
LED 4: LED Linear 22W:	1	10	29	290
			Total Proposed Watts =	5317

Section 4: Requirements Checklist

Interior Lighting PASSES: Design 45% better than code.

Lighting Wattage:

☐ 1. Total proposed watts must be less than or equal to total allowed watts.

Allowed Watts	Proposed Watts	Complies
9600	5317	YES

Controls, Switching, and Wiring:

☐ 2. Daylight zones under skylights more than 15 feet from the perimeter have lighting controls separate from daylight zones adjacent to vertical fenestration.

☐ 3. Daylight zones have individual lighting controls independent from that of the general area lighting.

Exceptions:

☐ Contiguous daylight zones spanning no more than two orientations are allowed to be controlled by a single controlling device.

☐ Daylight spaces enclosed by walls or ceiling height partitions and containing two or fewer light fixtures are not required to have a separate switch for general area lighting.

☐ 4. Independent controls for each space (switch/occupancy sensor).

Exceptions:

☐ Areas designated as security or emergency areas that must be continuously illuminated.

☐ Lighting in stairways or corridors that are elements of the means of egress.

☐ 5. Master switch at entry to hotel/motel guest room.

☐ 6. Individual dwelling units separately metered.

☐ 7. Medical task lighting or art/history display lighting claimed to be exempt from compliance has a control device independent of the control of the nonexempt lighting.

☐ 8. Each space required to have a manual control also allows for reducing the connected lighting load by at least 50 percent by either controlling all luminaires, dual switching of alternate rows of luminaires, alternate luminaires, or alternate lamps, switching the middle lamp luminaires independently of other lamps, or switching each luminaire or each lamp.

Exceptions:

☐ Only one luminaire in space.

☐ An occupant-sensing device controls the area.

☐ The area is a corridor, storeroom, restroom, public lobby or sleeping unit.

☐ Areas that use less than 0.6 Watts/sq.ft.

☐ 9. Automatic lighting shutoff control in buildings larger than 5,000 sq.ft.

Exceptions:

☐ Sleeping units, patient care areas; and spaces where automatic shutoff would endanger safety or security.

☐ 10. Photocell/astronomical time switch on exterior lights.

Exceptions:

☐ Lighting intended for 24 hour use.

☐ 11. Tandem wired one-lamp and three-lamp ballasted luminaires (No single-lamp ballasts).

Exceptions:

☐ Electronic high-frequency ballasts; Luminaires on emergency circuits or with no available pair.

Section 5: Compliance Statement

Compliance Statement: The proposed lighting design represented in this document is consistent with the building plans, specifications and other calculations submitted with this permit application. The proposed lighting system has been designed to meet the 2009 IECC requirements in COM*check* Version 4.1.1.0 and to comply with the mandatory requirements in the Requirements Checklist.

Name - Title Signature Date

COM*check* Software Version 4.1.1.0

Exterior Lighting Compliance Certificate

Section 1: Project Information

Energy Code: **2009 IECC**
Project Title: LOGAN COUNTY COMMUNITY CENTER
Project Type: New Construction
Exterior Lighting Zone: 2 (Neighborhood business district)

Construction Site:
LOGAN COUNTY FAIRGROUNDS
STERLING, CO, CO

Owner/Agent:
LOGAN COUNTY
STERLING, CO, CO

Designer/Contractor:
CAIRN DESIGN, LLC
FORT COLLINS, CO, CO

Section 2: Exterior Lighting Area/Surface Power Calculation

A Exterior Area/Surface	B Quantity	C Allowed Watts / Unit	D Tradable Wattage	E Allowed Watts (B x C)	F Proposed Watts
ENTRY (Entry canopy)	340 ft2	0.25	Yes	85	30
COVERED WALK (Walkway < 10 feet wide)	167 ft of walkway length	0.7	Yes	117	165
EXIT (Other door (not main entry))	3 ft of door width	20	Yes	60	32
			Total Tradable Watts* =	262	227
			Total Allowed Watts =	262	
			Total Allowed Supplemental Watts** =	600	

* Wattage tradeoffs are only allowed between tradable areas/surfaces.
** A supplemental allowance equal to 600 watts may be applied toward compliance of both non-tradable and tradable areas/surfaces.

Section 3: Exterior Lighting Fixture Schedule

A Fixture ID : Description / Lamp / Wattage Per Lamp / Ballast	B Lamps/ Fixture	C \# of Fixtures	D Fixture Watt.	E (C X D)
ENTRY (Entry canopy 340 ft2): Tradable Wattage				
LED 1: OB: Other:	1	2	15	30
COVERED WALK (Walkway < 10 feet wide 167 ft of walkway length): Tradable Wattage				
LED 3: Other:	1	11	15	165
EXIT (Other door (not main entry) 3 ft of door width): Tradable Wattage				
LED 2: OA: Other:	1	1	32	32
			Total Tradable Proposed Watts =	227

Section 4: Requirements Checklist

Lighting Wattage:

☐ 1. Within each non-tradable area/surface, total proposed watts must be less than or equal to total allowed watts. Across all tradable areas/surfaces, total proposed watts must be less than or equal to total allowed watts.
Compliance: Passes.

Controls, Switching, and Wiring:

☐ 2. All exemption claims are associated with fixtures that have a control device independent of the control of the nonexempt lighting.

☐ 3. Lighting not designated for dusk-to-dawn operation is controlled by either a a photosensor (with time switch), or an astronomical time switch.

☐ 4. Lighting designated for dusk-to-dawn operation is controlled by an astronomical time switch or photosensor.

☐ 5. All time switches are capable of retaining programming and the time setting during loss of power for a period of at least 10 hours.

Exterior Lighting Efficacy:

☐ 6. All exterior building grounds luminaires that operate at greater than 100W have minimum efficacy of 60 lumen/watt.

Exceptions:

☐ Lighting that has been claimed as exempt and is identified as such in Section 3 table above.

☐ Lighting that is specifically designated as required by a health or life safety statue, ordinance, or regulation.

☐ Emergency lighting that is automatically off during normal building operation.

☐ Lighting that is controlled by motion sensor.

Exterior Lighting PASSES: Design 74% better than code.

Section 5: Compliance Statement

Compliance Statement: The proposed exterior lighting design represented in this document is consistent with the building plans, specifications and other calculations submitted with this permit application. The proposed lighting system has been designed to meet the 2009 IECC requirements in COM*check* Version 4.1.1.0 and to comply with the mandatory requirements in the Requirements Checklist.

Name - Title Signature Date

CAIRN DESIGN LLC
leading high performance building solutions

1805 Sheely Drive
Fort Collins, CO 80526

voice: (970)-286-7968

cairndesignllc.com

COLORADO REGISTERED
KENNETH R. CAIRNS
48202
PROFESSIONAL ENGINEER

PROJECT:
LOGAN COUNTY
COMMUNITY CENTER
ADDITION

SHEET TITLE:
ELECTRICAL
COMCHECK

ISSUE DATE:
BID/PERMIT
12/16/2022

REVISIONS:

PROJECT NO.:
2208

SHEET NO.
E-40

As instruments of service, these drawings and the design represented are the permanent property of Cairn Design, LLC. Reproduction or use of these drawings other than for the project intended, without written consent from the Designer, is prohibited. Unauthorized use will be subject to legal action.

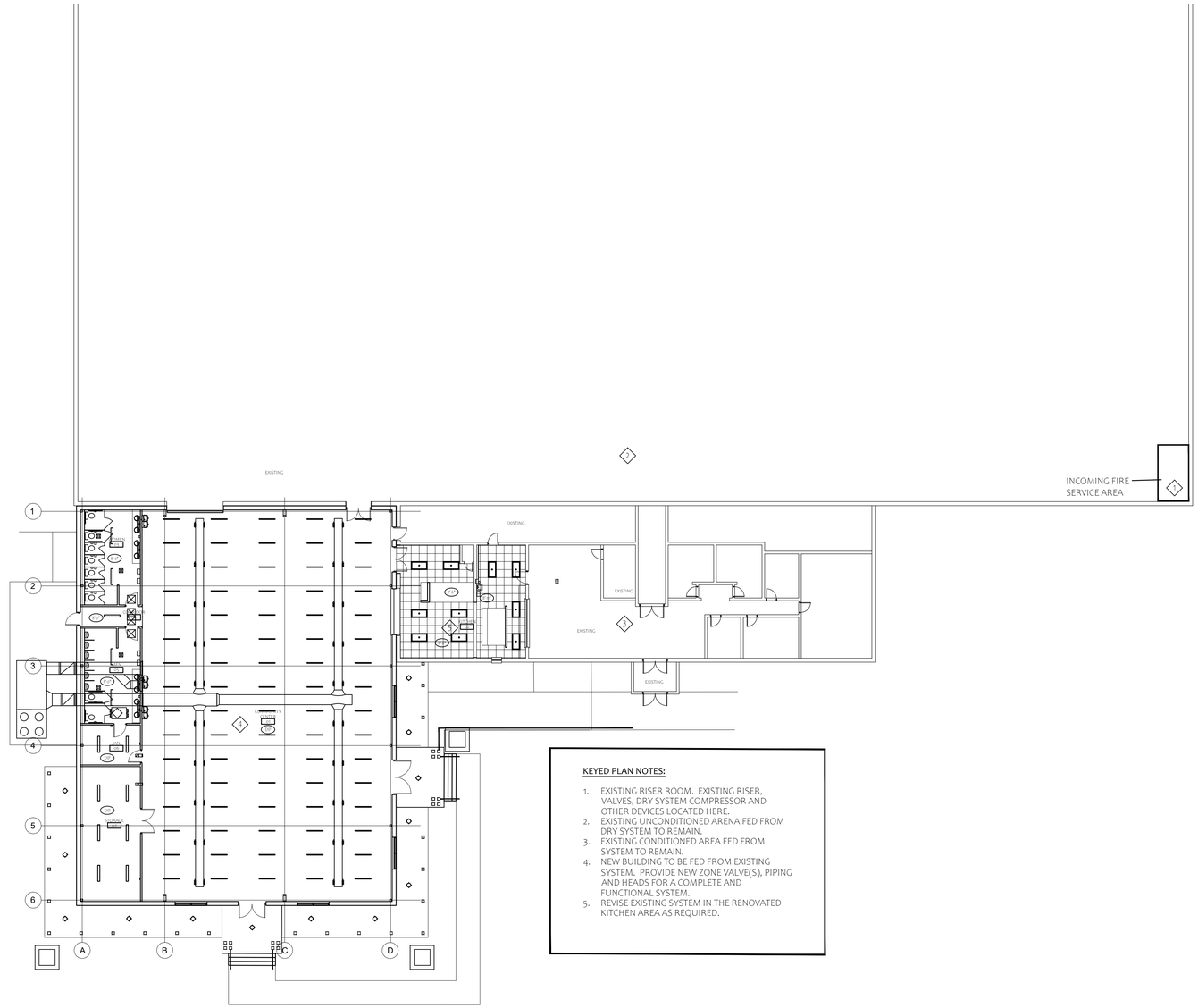

KEYED PLAN NOTES:

1. EXISTING RISER ROOM. EXISTING RISER, VALVES, DRY SYSTEM COMPRESSOR AND OTHER DEVICES LOCATED HERE.
2. EXISTING UNCONDITIONED ARENA FED FROM DRY SYSTEM TO REMAIN.
3. EXISTING CONDITIONED AREA FED FROM SYSTEM TO REMAIN.
4. NEW BUILDING TO BE FED FROM EXISTING SYSTEM. PROVIDE NEW ZONE VALVE(S), PIPING AND HEADS FOR A COMPLETE AND FUNCTIONAL SYSTEM.
5. REVISE EXISTING SYSTEM IN THE RENOVATED KITCHEN AREA AS REQUIRED.

FIRE SUPPRESSION SYSTEM

THE FIRE SUPPRESSION SYSTEM SHALL BE DESIGN-BUILD BY THE SPRINKLER CONTRACTOR. FIRE SPRINKLER DESIGNER SHALL BE A PROFESSIONAL ENGINEER OR NICET TECHNICIAN APPROVED BY THE AHJ FOR SPRINKLER DESIGN.

THE ENTIRE NEW BUILDING AREA SHALL BE COVERED BY THE SYSTEM.

THE SPRINKLER CONTRACTOR SHALL PROVIDE ALL EQUIPMENT NECESSARY FOR A COMPLETE AND FUNCTIONAL SYSTEM, INCLUDING VALVES, GAUGES, ALARMS, WATER FLOW DEVICES, ETC.

THE SPRINKLER SYSTEM SHALL COMPLY WITH ALL REQUIREMENTS OF IFC, IBC, NFPA, AND THE LOCAL FIRE DEPARTMENT.

01 FIRE PROTECTION PLAN
1/16"=1'-0"

CAIRN DESIGN LLC
leading high performance building solutions

1805 Sheely Drive
Fort Collins, CO 80526

voice: (970)-286-7968

cairndesignllc.com

STATE OF COLORADO
KATHERINE W. LIGON
404152
LICENSED ARCHITECT

PROJECT:

LOGAN COUNTY COMMUNITY CENTER ADDITION

SHEET TITLE:

FIRE PROTECTION PLAN

ISSUE DATE:

BID/PERMIT
12/16/2022

REVISIONS:

PROJECT NO.:
2208

SHEET NO.

FP-01

As instruments of service, these drawings and the design represented are the permanent property of Cairn Design, LLC. Reproduction or use of these drawings other than for the project intended, without written consent from the Designer, is prohibited. Unauthorized use will be subject to legal action.

PART 1 - GENERAL

1.1 GENERAL DESCRIPTION

FURNISH ALL MATERIALS AND LABOR FOR THE DETAILED DESIGN AND INSTALLATION FOR A COMPLETE FIRE SPRINKLER SYSTEM, HEREAFTER REFERRED TO AS THE "SYSTEM" IN COMPLETE COMPLIANCE WITH THIS SPECIFICATION AND ALL APPLICABLE CODES.

THE CONCEPTUAL DRAWINGS AND THIS SPECIFICATION DEFINE THE SCOPE OF WORK FOR THE PROJECT. THE CONCEPTUAL DRAWINGS ARE INTENDED TO INDICATE COVERAGE AREAS ONLY, AND THE CONTRACTOR'S RESPONSIBILITIES ARE DEFINED HEREIN. WHERE CONFLICTS OCCUR BETWEEN THE SPECIFICATION AND CONCEPTUAL DRAWINGS, THE BIDDER IS INSTRUCTED TO REQUEST CLARIFICATION PRIOR TO BIDDING. IN GENERAL, SHOULD A CONFLICT OCCUR, THE SPECIFICATION WILL OVERRULE THE CONCEPTUAL DRAWINGS.

THE WORK SHALL BE DESIGN-BUILD AND BE INCLUDED IN THE CONTRACTOR'S COST.

ALL APPLICABLE FEES, TAXES, AND PERMIT COSTS FOR ALL WORK CONTAINED IN THIS SPECIFICATION SECTION SHALL BE INCLUDED IN THIS CONTRACTOR'S BASE BID.

CONTRACTOR SHALL BE RESPONSIBLE FOR THE REVIEW AND COMPLIANCE WITH THIS SPECIFICATION SECTION. ALL WORK SHALL BE PERFORMED IN ACCORDANCE WITH THESE SPECIFICATIONS AND GOOD ENGINEERING AND INSTALLATION PRACTICE. MODIFICATIONS TO THESE SPECIFICATIONS WILL NOT BE ACCEPTED WITHOUT THE EXPRESSED WRITTEN APPROVAL OF OWNER, OWNER'S REPRESENTATIVE, AND/OR OWNER'S INSURANCE CARRIER; HEREIN REFERRED TO AS THE "OWNER". IT IS CONTRACTOR'S RESPONSIBILITY TO DOCUMENT THE REQUIRED APPROVALS OF ANY SUCH MODIFICATIONS PRIOR TO THE EXECUTION OF WORK.

CONTRACTOR SHALL VERIFY ALL SITE CONDITIONS AND INFORMATION CONTAINED ON THE CONCEPTUAL DRAWINGS AND IS RESPONSIBLE FOR THE COMPLETE DESIGN AND INSTALLATION OF THE SYSTEM IN ACCORDANCE WITH THE SPECIFICATIONS. CONTRACTOR SHALL

1.2 INTENT OF SPECIFICATIONS

THE WORK PERFORMED PURSUANT TO THESE SPECIFICATIONS IS TO BE COMPLETE IN EVERY RESPECT, RESULTING IN THE SYSTEM INSTALLED IN ACCORDANCE WITH THE APPLICABLE CODES, STANDARDS, MANUFACTURERS' RECOMMENDATIONS, AND UNDERWRITERS LABORATORIES INC. (UL) LISTINGS AND/OR FACTORY MUTUAL (FM) GLOBAL APPROVAL.

UPON COMPLETION OF THIS WORK, AND AS A PART OF THIS CONTRACT, CONTRACTOR SHALL PROVIDE OWNER WITH:

COMPLETE INFORMATION AND "AS-BUILT" RECORD DRAWINGS DESCRIBING AND DEPICTING THE ENTIRE SYSTEM AS INSTALLED, INCLUDING ALL INFORMATION NECESSARY FOR MAINTAINING, TROUBLESHOOTING, AND/OR EXPANDING THE SYSTEM AT A FUTURE DATE.

COMPLETE DOCUMENTATION OF SYSTEM TESTING AND AUTHORITY HAVING JURISDICTION (AHJ) ACCEPTANCE.

CERTIFICATION THAT CONTRACTOR'S WORK HAS BEEN INSPECTED AND TESTED, IS INSTALLED ENTIRELY IN ACCORDANCE WITH THE APPLICABLE CODES, STANDARDS, MANUFACTURERS' RECOMMENDATIONS AND UL LISTINGS AND/OR FM APPROVALS, AND IS IN PROPER WORKING ORDER. CONTRACTOR SHALL USE "CONTRACTOR'S MATERIAL AND TEST CERTIFICATE(S)" AS REQUIRED BY NFPA CODES.

1.3 WORK INCLUDED

GENERAL: FURNISH ALL MATERIALS AND LABOR FOR THE DESIGN, INSTALLATION, AND TESTING OF NEW SPRINKLER SYSTEM IN ACCORDANCE WITH ALL APPLICABLE CODES AND REQUIREMENTS OF THIS SPECIFICATION.

SPRINKLER: THE INTENT OF THIS PROJECT IS TO PROVIDE COMPLETE AND CURRENT CODE COMPLIANT SPRINKLER PROTECTION THROUGHOUT THE BUILDING AREAS AS SHOWN ON THE CONCEPTUAL DRAWINGS. PROVIDE APPROPRIATE WATER FLOW (VANE TYPE), AND VALVE SUPERVISORY (TAMPER) SWITCHES TO PROVIDE ALL MONITORING OF THE SYSTEM.

SPRINKLER PROTECTION IS TO BE PROVIDED BASED ON THE APPLICABLE CRITERIA FOR THE HAZARD TYPE.

SUBMITTALS: PREPARE AND SUBMIT SHOP DRAWINGS, PRODUCT DATA SHEETS, HYDRAULIC CALCULATIONS, RECORD DRAWINGS AND OTHER SUBMITTALS REQUIRED HEREIN. WORK IS NOT TO PROCEED UNTIL ALL REQUIRED SUBMITTALS HAVE BEEN APPROVED BY OWNER AND ALL AHJ. CONTRACTOR SHALL BE RESPONSIBLE FOR THE SUBMISSION OF THE REQUIRED MATERIALS TO THE OWNER AND ALL APPROVING AUTHORITIES. ALL REQUIRED CALCULATIONS FOR WATER DELIVERY TIME FOR DRY PIPE SYSTEM(S), IF APPLICABLE SHALL BE SUBMITTED IN ACCORDANCE WITH THE REQUIREMENTS OF NFPA 13. IF THE DESIGN OF THE DRY SYSTEM(S) REQUIRE(S) THE USE OF A WATER DELIVERY TIME CALCULATION PROGRAM, CONTRACTOR SHALL CONFIRM THAT SUCH CALCULATIONS ARE ACCEPTABLE TO THE AHJ PRIOR TO SUBMITTING A BID.

TESTS: EACH NEW SPRINKLER AND/OR STANDPIPE SYSTEM SHALL BE TESTED IN ACCORDANCE WITH THE REQUIREMENTS OF NFPA 13 AND NFPA 14, AHJ AND THE OWNER. ATTENDANCE AT FIRE ALARM TESTS WHEN IT INCLUDES TESTS OF THE SPRINKLER ALARM AND SUPERVISORY DEVICES IS ALSO REQUIRED. CONTRACTOR SHALL BE RESPONSIBLE FOR CARRYING OUT ALL REQUIRED TESTS. SEPARATE TESTS MAY BE REQUIRED BY THE OWNER AND AHJ SHALL BE CARRIED OUT WITHOUT ADDITIONAL COST TO THE OWNER.

WARRANTY: WARRANTY ALL NEW EQUIPMENT AND SYSTEMS DURING INSTALLATION AND FOR A PERIOD OF ONE (1) YEAR AFTER FINAL ACCEPTANCE OF THE WORK BY THE OWNER.

APPROVALS: OBTAIN ALL APPROVALS REQUIRED FOR THE WORK OF THIS SECTION FROM THE AHJ AND OWNER.

FEES: OWNER WILL PAY ALL FEES REQUIRED TO OBTAIN PERMITS, INSPECTIONS AND FINAL APPROVAL OF THE WORK IN THIS SECTION.

COORDINATION: COORDINATE WORK WITH ALL OTHER TRADES WORKING ON THE PROJECT, AND WITH THE OTHER FIRE PROTECTION SYSTEM(S) SPECIFIED ELSEWHERE.

1.4 RELATED WORK SPECIFIED ELSEWHERE

ALARMS: WIRING AND CONNECTION TO SPRINKLER SYSTEM ALARM AND SUPERVISORY DEVICES SHALL BE PROVIDED BY FIRE PROTECTION CONTRACTOR AS REQUIRED.

DRAINS: FLOOR DRAINS AND OTHER FACILITIES FOR RECEIVING DISCHARGE FROM SPRINKLER AND STANDPIPE SYSTEM DRAINS.

1.5 WORKING CONDITIONS

IT SHALL BE THE RESPONSIBILITY OF ALL BIDDERS TO INSPECT THE JOB SITE AND BECOME FAMILIAR WITH THE CONDITIONS UNDER WHICH THE WORK WILL BE PERFORMED. INSPECTION OF THE BUILDING MAY BE MADE BY APPOINTMENT WITH THE OWNER'S REPRESENTATIVE. BIDDERS ARE REQUIRED TO INSPECT THE BUILDING PRIOR TO BID.

CONCEPTUAL DRAWINGS WHICH ARE IN THE POSSESSION OF THE OWNER WILL BE MADE AVAILABLE TO BIDDERS. IT SHALL BE THE BIDDERS' RESPONSIBILITY TO REVIEW THE DRAWINGS FOR THE PURPOSE OF PREPARING A BID. COPIES OF THE DRAWINGS WILL BE MADE AVAILABLE AT COST, UPON REQUEST. BIDDERS SHALL FIELD VERIFY ANY INFORMATION ON WHICH THE BIDDER INTENDS TO RELY PRIOR TO SUBMITTAL OF A BID.

THE CONTRACTOR WILL BE RESPONSIBLE FOR ATTENDING A PRE-CONSTRUCTION MEETING, WEEKLY CONSTRUCTION COORDINATION MEETINGS WITH THE OWNER'S REPRESENTATIVE, AND MONTHLY MEETINGS WITH THE OWNER'S CONSULTANT AND QUARTERLY PROJECT TEAM MEETINGS.

ALL WORK, SHALL BE CONDUCTED DURING NORMAL WORKING HOURS OF 9 A.M. TO 6 P.M. ALL WORK SHALL BE COORDINATED WITH THE OWNER'S REPRESENTATIVE. NOISE RESTRICTIONS SHALL APPLY AND WILL BE EXPLAINED AT THE PRE-BID MEETING.

THE CONTRACTOR SHALL BE RESPONSIBLE FOR PRIOR COORDINATION OF ALL WORK AND DEMOLITION WITH THE OWNER'S REPRESENTATIVE.

NEW FIRE SUPPRESSION SYSTEMS, COMPONENTS, AND/OR APPLIANCES SHALL BE PUT INTO SERVICE AS SOON AS THEY ARE FUNCTIONAL. ONCE PUT INTO SERVICE, THEY SHALL NOT BE REMOVED FROM SERVICE WITHOUT THE OWNER'S WRITTEN AUTHORIZATION.

1.6 QUALITY ASSURANCE

ALL WORK SHALL CONFORM TO THE REQUIREMENTS OF THE APPLICABLE PORTIONS OF THE NATIONAL FIRE PROTECTION ASSOCIATION (NFPA) STANDARDS AND OTHER GUIDELINES OR STANDARDS LISTED HEREIN AS ADOPTED BY THE AHJ:

INTERNATIONAL BUILDING CODE .

INTERNATIONAL FIRE CODE.

NFPA 13 - STANDARD FOR THE INSTALLATION OF SPRINKLER SYSTEMS

NFPA 14 - STANDARD FOR THE INSTALLATION OF STANDPIPE AND HOSE SYSTEMS

ALL WORK AND MATERIALS SHALL CONFORM TO ALL FEDERAL, STATE, AND LOCAL CODES AND REGULATIONS GOVERNING THIS INSTALLATION.

CODE CONFLICTS: SHOULD CONFLICTS EXIST BETWEEN THE REFERENCED NFPA STANDARDS, FEDERAL, STATE OR LOCAL CODES AND THIS SPECIFICATION, IT SHALL BE CONTRACTOR'S RESPONSIBILITY TO BRING THE CONFLICT TO THE ATTENTION OF OWNER FOR RESOLUTION. THE CONTRACTOR SHALL NOT ATTEMPT TO RESOLVE CODE CONFLICTS WITH THE LOCAL AUTHORITY, INDEPENDENT OF OWNER. IN GENERAL, IN THE EVENT OF A CONFLICT, THE MOST STRINGENT OF THE REQUIREMENTS WILL APPLY.

PERMIT FEES: CONTRACTOR SHALL BE RESPONSIBLE FOR FILING ALL DOCUMENTS, AND SECURING ALL PERMITS, INSPECTIONS AND APPROVALS NECESSARY FOR COMPLETING THE SCOPE OF THE WORK IN THIS SECTION. **OWNER SHALL PAY ALL PERMITTING FEES**.

EQUIPMENT: ALL DEVICES, SYSTEMS, EQUIPMENT AND MATERIALS FURNISHED AND INSTALLED SHALL BE NEW AND SHALL BE SUBMITTED FOR APPROVAL BY OWNER. ALL SPRINKLERS, PIPE, FITTINGS, HANGERS, VALVES, AND OTHER MATERIALS AND EQUIPMENT SHALL BE UL LISTED AND/OR FM APPROVED FOR THEIR INTENDED USE. ALL SHALL BE ACCEPTABLE TO THE AHJ WHEN SUCH AGENCIES HAVE LISTINGS OF ACCEPTABLE EQUIPMENT.

FITTINGS: FITTINGS MAY BE OF THE FLANGED, THREADED, OR GROOVED TYPE. WELDED OUTLETS ON CROSS-MAINS FOR RISER NIPPLES AND/OR BRANCH LINES, AND FOR SPRINKLER OUTLETS ON BRANCH LINES WILL BE PERMITTED. ALL SHALL BE UL LISTED AND/OR FM APPROVED FOR THEIR INTENDED USE. THE USE OF PLAIN-END FITTINGS TO JOIN STEEL PIPE IS NOT PERMITTED.

CONTRACTOR REQUIREMENTS: CONTRACTOR SHALL:

HOLD ALL LICENSES AND OBTAIN ALL PERMITS NECESSARY TO PERFORM WORK OF THIS TYPE IN THE STATE OF COLORADO. COPIES OF CONTRACTOR'S LICENSES SHALL BE PROVIDED WITH BID SUBMITTAL.

BE REGULARLY ENGAGED, FOR THE PAST FIVE (5) YEARS IN THE DESIGN, INSTALLATION, TESTING AND SERVICING OF AUTOMATIC SPRINKLER SYSTEMS FOR BUILDINGS OF THIS TYPE.

CONTRACTOR'S SITE SUPERVISOR WILL BE AT THE JOB SITE AT ALL TIMES WHEN WORK IS ACTIVELY IN PROGRESS.

1.7 SPRINKLER SYSTEM DESIGN CRITERIA

DENSITIES: HYDRAULICALLY DESIGNED AND CALCULATED SPRINKLER SYSTEM(S) SHALL BE INSTALLED IN ACCORDANCE WITH THE CONSTRUCTION DOCUMENTS.

1.8 SUBMITTALS

SHOP DRAWINGS: CONTRACTOR WILL BE AUTHORIZED TO START THE PROJECT OR PORTIONS OF THE PROJECT WHEN THE SHOP DRAWINGS FOR THE WORK ARE RECEIVED, REVIEWED AND APPROVED BY OWNER AND THE AHJ. INSTALLATION PRIOR TO THESE APPROVALS SHALL BE AT THIS CONTRACTOR'S RISK.

SHOP DRAWINGS SHALL SHOW ALL OF THE INFORMATION REQUIRED BY THE APPLICABLE NFPA CODES FOR WORKING PLANS.

SHOP DRAWINGS SHALL INCLUDE A DRAWING LEGEND SHEET IDENTIFYING:

ALL SYMBOLS USED ON THE DRAWINGS, BY TYPE OF DEVICE OR EQUIPMENT, MANUFACTURER AND MANUFACTURER'S PART NUMBER. THIS INFORMATION SHALL CORRESPOND TO THE MANUFACTURER'S CATALOG DATA SHEETS AND INSTALLATION MANUALS.

ALL CONVENTIONS, ABBREVIATIONS AND SPECIALIZED TERMINOLOGY USED ON THE DRAWINGS, AS NECESSARY TO UNDERSTAND AND INTERPRET THE INFORMATION CONTAINED THEREIN.

A COMPLETE DRAWING LIST IDENTIFYING ALL DRAWINGS IN THE SHOP DRAWING PACKAGE BY TITLE, DRAWING NUMBER AND SPECIFICATION CROSS REFERENCE.

SHOP DRAWINGS SHALL BE SINGLE LINE OR ARCHITECTURAL FLOOR PLAN DRAWINGS, DRAWN TO 1/8-INCH EQUALS 1 FOOT SCALE OR LARGER (I.E., 1/4-INCH, ETC.), SHOWING A KEY PLAN AND ALL OTHER INFORMATION REQUIRED BY THE APPLICABLE NFPA CODES FOR SHOP DRAWINGS.

PRODUCT DATA: CONTRACTOR SHALL SUBMIT A PRODUCT DATA SUBMITTAL WITH THE SHOP DRAWINGS. MANUFACTURERS' DATA SHEETS SHALL SHOW THE TYPE AND MODEL OF ALL EQUIPMENT OR MATERIAL PROPOSED. THIS INFORMATION SHALL INCLUDE TYPE OF PIPE, HANGERS, VALVES, PIPE FITTINGS/JOINING METHODS, AIR COMPRESSORS, RELEASING PANELS, DETECTION EQUIPMENT, SPRINKLERS, WATER FLOW DEVICES, SUPERVISORY DEVICES, FIRE DEPARTMENT CONNECTIONS, ESCUTCHEONS, AND SIGNAGE. WHEN A DATA SHEET SHOWS MORE THAN ONE PRODUCT, THE SPECIFIC PROPOSED PRODUCT SHALL BE CLEARLY INDICATED BY ARROWS OR OTHER SUITABLE MEANS. ALL MANUFACTURERS' DATA SHEETS SHALL CLEARLY SHOW ALL UL LISTINGS AND/OR FM APPROVALS FOR EACH PRODUCT SUBMITTED.

CONTRACTOR SHALL PROVIDE HYDRAULIC CALCULATIONS IN ACCORDANCE WITH THE REQUIREMENTS OF NFPA 13, SHOWING THAT THE PIPE SIZES PROVIDED WILL PRODUCE ADEQUATE PERFORMANCE. A MINIMUM SAFETY FACTOR OF 10 PSI OR 10%, WHICHEVER IS GREATER, OF THE AVAILABLE PRESSURE AT THE REQUIRED SYSTEM FLOW (INCLUDING ALL REQUIRED HOSE STREAM DEMANDS) SHALL BE DEMONSTRATED IN THE HYDRAULIC CALCULATIONS.

THREE (3) SETS OF SHOP DRAWINGS, PRODUCT DATA SHEETS, AND HYDRAULIC CALCULATIONS AS DESCRIBED IN PARTS A, B AND C SHALL BE SUBMITTED TO OWNER FOR REVIEW. ONLY COMPLETE SUBMITTALS CONTAINING ALL REQUIRED INFORMATION FOR ALL WORK REQUIRED IN THIS SECTION WILL BE REVIEWED. INCOMPLETE SUBMITTALS WILL BE RETURNED TO CONTRACTOR WITHOUT BEING REVIEWED.

ALL DRAWINGS AND DIAGRAMS SHALL BE PREPARED ON DRAWING SHEETS OF UNIFORM SIZE, 24 BY 36 INCHES MINIMUM, AND SHALL CONTAIN NO EXTRANEOUS INFORMATION. MARKED UP ELECTRICAL, HVAC, OR SIMILAR DRAWINGS OR COPIES OF CATALOG DATA SHEETS ARE NOT ACCEPTABLE IN LIEU OF THE REQUIRED DRAWINGS OR DIAGRAMS. ALL OTHER INFORMATION REQUIRED FOR THIS SUBMITTAL SHALL BE SUBMITTED IN ONE OR MORE APPROPRIATELY LABELED (I.E., CONTRACTOR'S NAME, PROJECT, SUBMITTAL NAME/DESCRIPTION AND DATE) AND INDEXED 3-RING BINDERS.

ALL DRAWINGS AND DIAGRAMS SHALL INCLUDE CONTRACTOR'S TITLE BLOCK, COMPLETE WITH DRAWING TITLE, CONTRACTOR'S NAME, ADDRESS, DATE INCLUDING REVISIONS, AND PREPARER'S AND REVIEWERS INITIALS. ALL DRAWINGS AND DIAGRAMS SHALL BE REVIEWED AND STAMPED BY A REGISTERED FIRE PROTECTION ENGINEER OR NICET TECHNICIAN, AS REQUIRED BY THE AHJ.

SAMPLES: WITHIN 30 DAYS OF AUTHORIZATION TO PROCEED, CONTRACTOR SHALL SUBMIT TO OWNER FOR APPROVAL, SAMPLES OF ALL TYPES OF PROPOSED SPRINKLERS, INCLUDING TYPES OF FINISHES AVAILABLE AND A COMPLETE LIST OF WHERE EACH TYPE AND FINISH WILL BE INSTALLED.

MOCK UPS OF ANY PROPOSED SOFFIT MATERIAL SHOWING SHALL BE PROVIDED. THE MOCK- UP SHALL INCLUDE THE COLOR AND TYPE OF MATERIAL PROPOSED ALONG WITH AN INSTALLED SECTION OF PIPE AND SPRINKLERS.

PRIOR TO START OF INSTALLATION, CONTRACTOR SHALL SUBMIT COPIES OF ALL PERMITS AND APPROVALS TO OWNER NECESSARY TO CONDUCT THIS WORK. A MINIMUM OF ONE COMPLETE SET OF SUCH PERMITS AND APPROVALS SHALL BE KEPT BY CONTRACTOR AT THE JOB SITE AND SHALL BE AVAILABLE FOR REVIEW.

CONTRACTOR SHALL PROVIDE OWNER WITH ONE COPY OF ALL DOCUMENTS THAT ARE REVIEWED AND APPROVED BY THE AHJ AND/OR LOCAL CODE AUTHORITIES. THESE DOCUMENTS SHALL INCLUDE, BUT NOT BE LIMITED TO, THE FOLLOWING:

SITE INSPECTION FORMS

SHOP DRAWINGS

FINAL INSPECTION FORMS

ALL DOCUMENTS SHALL INCLUDE ALL REQUIRED APPROVAL STAMPS, SIGNATURES OR OTHER INFORMATION NECESSARY TO PROPERLY CERTIFY THAT THE INSTALLATION HAS BEEN REVIEWED AND ACCEPTED BY THE FIRE MARSHAL'S OFFICE.

OPERATION AND MAINTENANCE (O&M) MANUAL: THE CONTRACTOR SHALL PROVIDE OWNER WITH AN INDEXED 3-RING BINDER CONTAINING:

11" X 17" REDUCED COPIES OF THE 'AS-BUILT' RECORD DRAWINGS REQUIRED BELOW (FINAL SUBMITTAL ONLY).

MANUFACTURERS' CATALOG DATA SHEETS AND INSTALLATION MANUALS.

COPY OF ALL TEST CERTIFICATES AND APPROVALS.

A LIST OF RECOMMENDED SPARE PARTS AND SUMMARY OF SPARE PARTS PROVIDED.

A SERVICE DIRECTORY, INCLUDING A LIST OF CONTRACTOR'S CONTACT NAMES AND TELEPHONE NUMBERS FOR SERVICE ON THE SYSTEM, INCLUDING EMERGENCY SERVICE AS REQUIRED ELSEWHERE IN THESE SPECIFICATIONS.

RECORD DRAWINGS: CONTRACTOR SHALL PROVIDE AND MAINTAIN ON THE SITE AN UP-TO- DATE 'AS-BUILT' RECORD SET OF APPROVED SHOP DRAWING PRINTS WHICH SHALL BE MARKED TO SHOW EACH AND EVERY CHANGE MADE TO THE SPRINKLER SYSTEM FROM THE ORIGINAL APPROVED SHOP DRAWINGS. THIS REQUIREMENT SHALL NOT BE CONSTRUED AS AUTHORIZATION TO DEVIATE FROM OR MAKE CHANGES TO THE SHOP DRAWINGS APPROVED BY OWNER WITHOUT WRITTEN INSTRUCTION FROM OWNER IN EACH CASE. THESE DRAWINGS SHALL BE MAINTAINED IN A CURRENT CONDITION AT ALL TIMES AND SHALL BE MADE AVAILABLE FOR REVIEW IMMEDIATELY UPON REQUEST DURING NORMAL WORKING HOURS THROUGHOUT THE INSTALLATION.

UPON COMPLETION OF THE 'AS-BUILT' RECORD DRAWINGS AND BEFORE FINAL APPROVAL, ONE SET OF REPRODUCIBLE 'AS-BUILT' RECORD DRAWINGS SHALL BE DELIVERED TO OWNER. UPON APPROVAL BY OWNER, THREE (3) SETS OF FINAL RECORD DRAWINGS SHALL BE FURNISHED TO OWNER. IN ADDITION, A RECORD SET OF DRAWINGS SHALL BE TRANSMITTED TO OWNER IN THE LATEST VERSION OF AUTOCAD 2010 ELECTRONIC FORMAT WITH ANY APPLICABLE EXECUTABLE, UN-ARCHIVING FILES.

IF CONTRACTOR'S SUBMITTALS, UPON REVIEW BY OWNER, DO NOT CONFORM TO THE REQUIREMENTS OF THESE SPECIFICATIONS, CONTRACTOR SHALL BE REQUIRED TO RESUBMIT WITH MODIFICATIONS, WITHIN TEN (10) WORKING DAYS OF RECEIPT OF OWNER'S NOTIFICATION TO CONTRACTOR. CONTRACTOR SHALL BE RESPONSIBLE FOR OWNER'S EXPENSES FOR SUBSEQUENT REVIEW OF REJECTED SUBMITTALS THAT WERE NECESSITATED BY CONTRACTOR'S FAILURE TO MAKE THE REQUESTED MODIFICATIONS. SUCH EXTRA FEES SHALL BE DEDUCTED FROM PAYMENTS BY OWNER TO CONTRACTOR.

PART 2 – SYSTEM REQUIREMENTS

2.1 GENERAL

ALL EQUIPMENT AND SYSTEM COMPONENTS FURNISHED AND INSTALLED SHALL BE NEW AND OF FIRST QUALITY, AND BE LISTED BY UNDERWRITERS LABORATORIES INC. (UL), AND/OR APPROVED BY FACTORY MUTUAL (FM) FOR THEIR INTENDED USE. ALL SUCH EQUIPMENT AND SYSTEM COMPONENTS SHALL BE INSTALLED IN ACCORDANCE WITH THE RESPECTIVE UL LISTINGS AND/OR FM APPROVALS. ALL MATERIALS SHALL BE ACCEPTABLE TO AHJ.

2.2 PIPE AND FITTINGS - GENERAL

PRESSURE RATINGS: PRESSURE RATINGS OF ALL FITTINGS SHALL MEET OR EXCEED MAXIMUM WORKING PRESSURES AVAILABLE WITHIN THE SYSTEM.

CORROSION PROTECTION: ALL PIPING AND HANGERS, WHERE EXPOSED TO THE WEATHER OR INSTALLED IN A CORROSIVE ATMOSPHERE, SHALL BE PROTECTED AGAINST CORROSION. PIPING AND HANGERS IN SUCH AREAS SHALL BE STAINLESS STEEL AND/OR HOT DIPPED GALVANIZED. PIPING HAVING AN EXTERNAL ONLY GALVANIZED FINISH IN SUCH AREAS IS UNACCEPTABLE.

2.3 ABOVEGROUND PIPING COMPONENTS

PIPE SIZES 2.5 INCHES (65 MM) AND LARGER.

PIPING SHALL BE ASTM A-53/A-135/A-795, WEIGHT CLASS STD (STANDARD), SCHEDULE 40 (EXCEPT FOR SCHEDULE 30 FOR PIPE SIZES 8 INCHES (200 MM) AND GREATER IN DIAMETER), TYPE E OR TYPE S, GRADE A; BLACK STEEL PIPE. STEEL PIPE SHALL BE JOINED BY MEANS OF FLANGES WELDED OR SCREWED TO THE PIPE, THREADED FITTINGS, OR GROOVED COUPLINGS ONLY. PIPING SHALL NOT BE JOINED BY WELDING OR WELD FITTINGS.

THIN WALL PIPE: SCHEDULE 10 PIPE MEETING ASTM A-53, A-135 OR A-795 REQUIREMENTS WITH GROOVED PIPE COUPLINGS AND FITTINGS. GROOVES IN SCHEDULE 10 PIPE SHALL BE ROLLED GROOVE ONLY. PIPE HAVING WALL THICKNESSES LESS THAN SCHEDULE 10 ARE UNACCEPTABLE.

PIPING SIZES 2 INCHES (50 MM) AND SMALLER

STEEL PIPE: STEEL PIPING SHALL BE ASTM A-53/A-135/A-795, WEIGHT CLASS STD (STANDARD), SCHEDULE 40, TYPE E OR TYPE S, GRADE A, STEEL PIPE WITH THREADED END CONNECTIONS. FITTINGS SHALL BE ASME B16.39, CLASS 150, CAST OR DUCTILE IRON THREADED FITTINGS. UNIONS SHALL BE ASME B16.39, CLASS 150, UNIONS. PIPE MAY ALSO BE JOINED USING GROOVED COUPLINGS AND FITTINGS. WHERE GROOVED JOINING IS USED, CUT OR ROLLED GROOVES ARE ACCEPTABLE.

PIPE HANGERS AND SUPPORTS

PIPE HANGERS AND SUPPORTS SHALL BE UL LISTED AND/OR FM APPROVED, AND SHALL BE THE ADJUSTABLE TYPE. INSTALLATION SHALL BE ACCORDING TO THE MANUFACTURERS' LISTING.

SEISMIC HANGERS AND BRACING SHALL BE UL LISTED AND/OR FM APPROVED FOR FIRE PROTECTION USE AND SHALL BE INSTALLED IN ACCORDANCE WITH THEIR LISTINGS AND MANUFACTURERS' RECOMMENDATIONS. TYPE, QUANTITY, AND SPACING SHALL BE IN ACCORDANCE WITH THE REQUIREMENTS FOR THE SPECIFIC SEISMIC ZONE REQUIREMENTS AND THOSE OF NFPA.

2.4 SPRINKLERS

CONTRACTOR SHALL FURNISH AND INSTALL FIRE SPRINKLERS OF THE TYPES REQUIRED FOR THE AREAS BEING SERVED.

UNIFORMITY: ALL SPRINKLERS WITHIN A SPACE SHALL BE FROM THE SAME MANUFACTURER AND SHALL HAVE THE SAME TYPE AND STYLE OF HEAT RESPONSE ELEMENT, INCLUDING TEMPERATURE RATING AND RESPONSE CHARACTERISTICS.

TEMPERATURE RATING: IT SHALL BE CONTRACTOR'S RESPONSIBILITY TO INSTALL SPRINKLERS OF THE PROPER TEMPERATURE RATING AS REQUIRED BY NFPA 13.

CORROSION RESISTANCE: SPRINKLERS LOCATED ON EXTERIOR PIPING SYSTEMS OR IN AREAS EXPOSED TO CORROSIVE ATMOSPHERES SHALL BE UL LISTED AND/OR FM APPROVED CORROSION RESISTANT COATED OR STAINLESS STEEL.

SPRINKLER ORIFICE: SPRINKLER ORIFICE SIZES SHALL BE CONFIRMED THROUGH HYDRAULIC CALCULATIONS FOR THE SYSTEM(S). SPRINKLERS HAVING A NOMINAL 'K' FACTOR OF LESS THAN
5.6 ARE NOT ACCEPTABLE UNLESS SPECIFICALLY ALLOWED BY NFPA 13 AND ARE INSTALLED FOR THEIR LISTED APPLICATION. THE ORIFICE SIZE SHALL BE UNIFORM WITHIN A PROTECTED AREA.

ALL SPRINKLERS IN FINISHED AREAS SHALL BE CENTER OF TILE PLUS OR MINUS 1/2 INCH, UNLESS APPROVED BY THE OWNER. ALL SPRINKLERS SHALL BE ALIGNED IN ALL DIRECTIONS WHEN MULTIPLE SPRINKLERS ARE IN THE SAME AREA AND ARE IN THE SAME LINE OF SIGHT. WHERE ACCEPTABLE TO AHJ, THE USE OF FLEXIBLE DROPS IS PERMITTED, BUT ALL SUCH DROPS MUST BE INSTALLED IN ACCORDANCE WITH THEIR UL LISTINGS AND/OR FM APPROVALS. WHERE SUCH LISTINGS/APPROVALS DIFFER, THE MOST STRINGENT INSTALLATION REQUIREMENTS WILL APPLY. THE USE OF FLEXIBLE DROPS SHALL BE ACCOUNTED FOR IN ALL HYDRAULIC CALCULATIONS FOR THE SYSTEM(S). FLEXIBLE DROPS SHALL BE OF THE BRAIDED, STAINLESS STEEL HOSE STYLE. FLEXIBLE DROPS EMPLOYING CORRUGATED STEEL TUBING WILL NOT BE PERMITTED.

PART 3 – SYSTEM REQUIREMENTS

3.1 GENERAL INSTALLATION

AESTHETICS SHALL BE A PRIMARY CONSIDERATION WHEN INSTALLING SPRINKLERS AND SPRINKLER PIPING IN ALL AREAS. ANY FACET OF SPRINKLER INSTALLATION THAT DEVIATES FROM THE APPROVED SHOP DRAWINGS AND DOES NOT MEET WITH OWNER'S APPROVAL SHALL BE REVISED BY CONTRACTOR TO OWNER'S SATISFACTION AT NO ADDITIONAL COST.

ALL HOLES MADE BY CONTRACTOR IN ANY WALL, CEILING, OR FLOOR SHALL BE PATCHED BY CONTRACTOR, RESTORING THE WALL, CEILING, FLOOR OR MEMBER TO ITS ORIGINAL CONDITION, FIRE RESISTANCE, AND INTEGRITY.

LOCATION OF ALL EQUIPMENT, CONTROLS, PIPING, VALVES AND DRAINS SHALL BE SUBJECT TO OWNER'S APPROVAL.

ALL SPRINKLERS AND EQUIPMENT SHALL BE INSTALLED IN ACCORDANCE WITH MANUFACTURERS' INSTRUCTIONS. ALL SPECIAL TOOLS, INCLUDING SPRINKLER WRENCHES, RECOMMENDED BY THE MANUFACTURER SHALL BE USED.

SPRINKLERS SHALL BE INSTALLED WITH THE DEFLECTOR TO CEILING DISTANCES IN ACCORDANCE WITH THEIR UL LISTINGS AND/OR FM APPROVAL AND THE REQUIREMENTS OF NFPA 13.

3.2 PIPING

ALL SPRINKLER PIPING INSTALLED IN UNFINISHED AREAS MAY BE EXPOSED.

ALL PIPING EXPOSED WITHIN THE BUILDING SHALL BE PAINTED WITH ONE COAT BY CONTRACTOR. OWNER IS TO SELECT THE COLORS. ALL EXTERIOR PIPING SHALL BE PRIMED WITH ZINC CHROMATE AND PAINTED BY CONTRACTOR. COLORS ARE TO BE APPROVED BY THE OWNER IN WRITING PRIOR TO START OF THE WORK.

ESCUTCHEON PLATES: ALL EXPOSED PIPE WHICH PASSES THROUGH A WALL, CEILING, OR FLOOR SHALL BE PROVIDED WITH METAL ESCUTCHEON PLATES.

MINIMUM HEIGHT: ALL EXPOSED PIPING AND DEVICES SHALL BE INSTALLED AS HIGH AS POSSIBLE, BUT NO LESS THAN FOURTEEN (14) FEET CLEAR ABOVE THE FINISHED FLOOR IN TRAFFIC OR WORKING AREAS, SO AS NOT TO OBSTRUCT ANY PORTION OF A DOORWAY OR VEHICLE WAY. PIPE AND FITTINGS SHALL NOT INTERFERE WITH THE OPERATION OR ACCESSIBILITY OF ANY MECHANICAL, PLUMBING OR ELECTRICAL EQUIPMENT.

PROTECTION: CONTRACTOR SHALL PROVIDE OWNER APPROVED, ADEQUATE PERMANENT PROTECTION FOR ANY INSTALLED PIPING, VALVES, DEVICES OR ACCESSORIES WHICH, IN OWNER'S OPINION, ARE SUBJECT TO PHYSICAL DAMAGE OR MAY BE HAZARDS.

FIRE STOPPING: PIPE THAT PASSES THROUGH FIRE-RATED RESISTIVE BARRIERS (INCLUDING SHAFT WALLS AND CORRIDOR WALLS) SHALL BE SLEEVED AND GROUTED OR SEALED TO MAINTAIN THE INTEGRITY AND RATING OF THE FIRE RESISTIVE BARRIER. MATERIALS USED WITH CPVC PIPE MUST BE LISTED BY THE MANUFACTURER AS COMPATIBLE WITH THE CPVC PIPE

TESTING: ALL PIPING IS TO BE FLUSHED AND HYDRAULICALLY TESTED PRIOR TO ACCEPTANCE BY OWNER. FLUSHING AND TESTING MUST BE PERFORMED IN ACCORDANCE WITH NFPA STANDARDS.

CONTRACTOR SHALL PROVIDE ALL EQUIPMENT NECESSARY FOR TESTING AND FLUSHING AND ANY SPECIAL EQUIPMENT REQUIRED FOR THE INSTALLATION OF ANY PORTION SPRINKLER (AND/OR STANDPIPE) SYSTEM(S). CONTRACTOR SHALL REMOVE ALL SUCH EQUIPMENT AT THE END OF THE JOB.

ALL ABOVE GROUND PIPING 2-1/2" AND LARGER SHALL BE PROVIDED WITH LABELS AT 20-FOOT INTERVALS INDICATING SPRINKLER SYSTEM PIPING.

3.3 FLUSHING AND SANITIZATION

ALL EQUIPMENT AND MATERIALS PRIOR TO INSTALLATION SHALL BE CLEAN INSIDE AND OUTSIDE. ALL WASTE MATERIAL SUCH AS CHIPS, FILINGS, WELDING STUBS, DIRT, RAGS, DEBRIS, AND ANY OTHER FOREIGN MATERIAL SHALL BE REMO